M12, Push-Pull inner locking, male, angled, 8 poles, X-coded, RJ45, male, straight, 8 poles, shielded, Industrial Ethernet 10 GBit/s

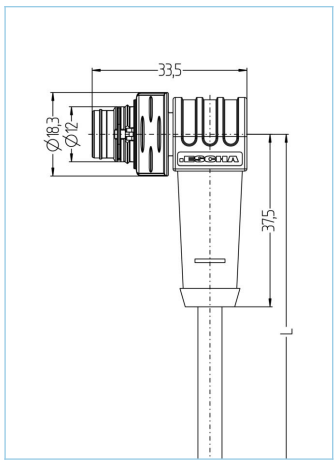

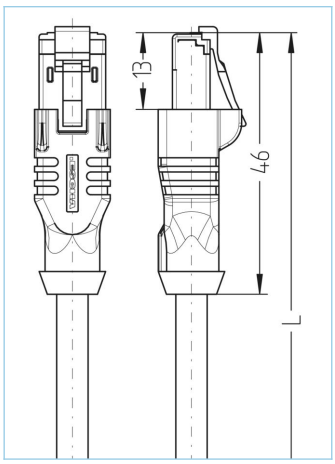



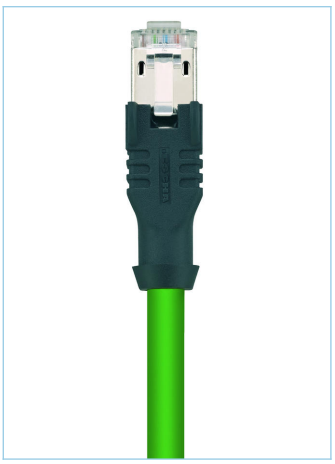

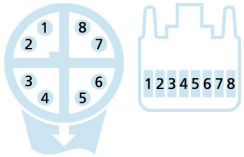

Product data	
Item description	IE-PPIWWASSX8.066-m-IE-RJ45SS8.002/S3500
Item-No.	V0014138
Length	on demand
Customs tariff-No.	85444290
Step-File	IE-PPIWWASSX8-L-IE-RJ45SS8.stp

Technical data	A-side	B-side
Connector	male, angled, M12 Push-Pull	male, straight, RJ45
Number of pins	8	8
Pin assignment	1 WHOG, 2 OG; 3 WHGN, 4 GN; 5 WHBN, 6 BN; 7 WHBU, 8 BU	1 WHOG, 2 OG; 3 WHGN, 4 BU; 5 WHBU, 6 GN; 7 WHBN, 8 BN
Allocation		T568B
Coding of	X	
Rated voltage	50V$_{AC}$ | 60V$_{DC}$	60V
Current load (at 40°C)	0.5A	1A
Insulation resistance	≥10^{8}Ω	≥10^{8}Ω
Transmission features	Cat6A	Cat6A
Ambient temperature product	-30°C...+90°C	-40°C...+70°C
Contact material	Metal, CuZn, gold-plated	Metal, CuSn, gold-plated
Contact-carrier material	Plastic, PA GF, BK	Plastic
Grip body material	Plastic, TPU, BK	Plastic, TPE, BK
Shielding	with shielding	with shielding
Material of shielding housing	Zinc die-cast	Metal, CuZn, nickel-plated
Standards	IEC 61076-2-010	IEC 60603-7-51
Degree of protection (mounted)	IP65, IP67, IP68	IP20
Mechanical life-cycle	>100 mating cycles	>750 mating cycles
Degree of pollution	3	1

The information contained in this data sheet was compiled with the utmost care. The liability for the correctness, completeness and timelines is limited to gross negligence.

Cable web	Cat7, PUR, UL, S3500

Shielded PUR-cable for industrial applications. The cable meets the UL-Style 20963 and the Cat7 (electrical properties according to EN50288-4-2) requirements. Materials and a constructive setup allow for increased mechanical stresses (abrasion, bending, vibrations etc.) of the cable.

Outer diameter of jacket	6.40 mm
Cable-jacket material	PUR
Jacket color	GN, similar RAL6018
Wire cross-section	4 x 2 x 0.14 mm²
Wire insulation material	PE
Wire colors	WH/OG ; WH/GN ; WH/BN ; WH/BU
Wire structure	7 x 0.16 mm
Bending radius (fixed)	5 x Ø-cable
Bending radius (repeated)	10 x Ø-cable
Temperature range (repeated)	-20°C...+60°C
Temperature range (fixed)	-40°C...+80°C
Shielding	Yes
Halogen-free	Yes
Transmission features	Cat7
Rated voltage cable	30 V UL rating
Special features	halogen free, high flexibility, hydrolysis proof, no fire propargation, no corrosive gases, LABS free, microbes resistant, oil resistant, recyclable, RoHs compliant, acid- and alkali resistant, seawater resistant, UN ECE R 118, UV resistant

Classification	
eCl@ss 6.0	27060307
eCl@ss 7.0	27060307
eCl@ss 8.0	27060307
eCl@ss 9.0	27060307
ETIM 5.0	EC000830
ETIM 6.0	EC000830

Accessories

Unlocking clip for RJ45
https://www.escha.net/en/products/standard/accessories-for-connectivity?p=1&o=3&n=15&f=807

Marking rings Ø 9mm
https://www.escha.net/en/products/standard/accessories-for-connectivity?p=1&o=3&n=15&f=809