M12, female, straight, 3 poles, M12, male, angled, 3 poles, sensor-/actuator cable

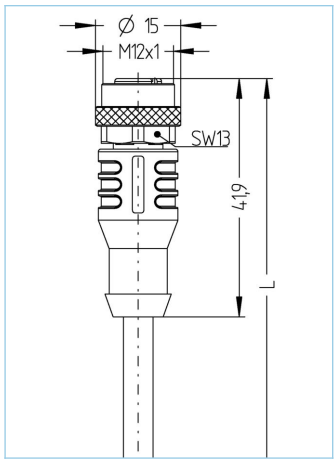

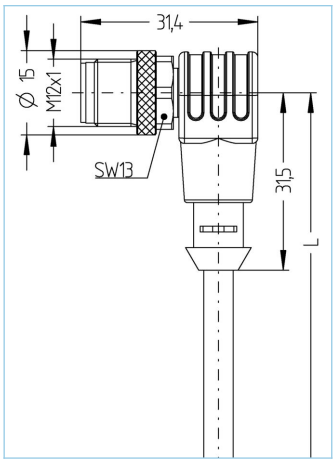





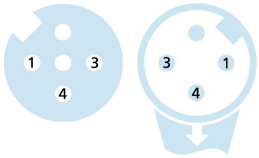

Product data	
Item description	AL-WAK3-m-AL-WWAS3/S370
Item-No.	V0002964
Length	on demand
Customs tariff-No.	85444290
Step-File	AL-WAK3_AL-WWAS3.stp

Technical data	A-side	B-side
Connector	female, straight, M12	male, angled, M12
Number of pins	3	3
Pin assignment	1 BN, 3 BU, 4 BK	1 BN, 3 BU, 4 BK
Coding of	A	A
Rated voltage	250V	250V
Current load (at 40°C)	4A	4A
Insulation resistance	>=10⁸Ω	>=10⁸Ω
Resistance	≤ 5mΩ	≤ 5mΩ
Ambient temperature product	-30°C...+90°C	-30°C...+90°C
Contact material	Metal, CuSn, gold-plated	Metal, CuSn, gold-plated
Contact-carrier material	Plastic, TPU, BK	Plastic, TPU, BK
Grip body material	Plastic, TPU, BK	Plastic, TPU, BK
Coupling nut material	Metal, CuZn, nickel-plated	Metal, CuZn, nickel-plated
Sealing (female) material	FPM/FKM	
Standards	IEC 61076-2-101	IEC 61076-2-101
Degree of protection (mounted)	IP65, IP67, IP68	IP65, IP67, IP68
Mechanical life-cycle	>100 mating cycles	>100 mating cycles
Degree of pollution	3	3

The information contained in this data sheet was compiled with the utmost care. The liability for the correctness, completeness and timelines is limited to gross negligence.

Cable web	PUR, UL, S370

Flexible, silicone- and halogen-free control line with high mechanical strength. The cable is chemicals, hydrolysis-, and microbes- resistant. The drag-chain application is possible at a bending radius of minimum 10 x d. Due to its weld-field immunity, the cable is very well suited for the flexible application in robotics, machine-tool, and metal-cutting production. The cables meet the UL and CSA (UL10493/20549; cULus) requirements.

Outer diameter of jacket	4.30 mm
Cable-jacket material	PUR
Jacket color	BK, similar RAL9005
Wire cross-section	3 x 0.34 mm²
Wire insulation material	PP
Wire colors	BN, BU, BK
Wire structure	42 x 0.10 mm
Bending radius (fixed)	5 x Ø-cable
Bending radius (repeated)	10 x Ø-cable
Temperature range (repeated)	-30°C...+90°C
Temperature range (fixed)	-40°C...+90°C
Temperature range (drag chain)	-25°C…+60°C
Drag chain-application	5 Mio. cycles
Halogen-free	Yes
Torsion	+/-360°/m, ≥ 2 Mio. cycles
Rated voltage cable	≤300 V
Special features	flame retardant, halogen free, hydrolysis proof, LABS free, oil resistant, ozone resistant, recyclable, RoHs compliant, acid- and alkali resistant, drag chain-adapted, welding sparks resistant, seawater resistant, silicone free, torsion resistant, UV resistant

Classification	
eCl@ss 6.0	27279218
eCl@ss 7.0	27279218
eCl@ss 8.0	27279218
eCl@ss 9.0	27060311
ETIM 5.0	EC001855
ETIM 6.0	EC001855

Accessories
Mounting-clip, M12 https://www.escha.net/en/products/standard/accessories-for-connectivity/8047660
Torque-wrench set https://www.escha.net/en/products/standard/accessories-for-connectivity/8055431
Marking rings Ø 9mm https://www.escha.net/en/products/standard/accessories-for-connectivity?p=1&o=3&n=15&f=809
Screw plug, M12 https://www.escha.net/en/products/standard/accessories-for-connectivity?p=1&o=3&n=15&f=812
Screw cap, M12 https://www.escha.net/en/products/standard/accessories-for-connectivity?p=1&o=3&n=15&f=811