M12, Push-Pull inner locking, male, angled, 4 poles, D-coded, M12, Push-Pull inner locking, male, straight, 4 poles, D-coded, shielded, rail approved

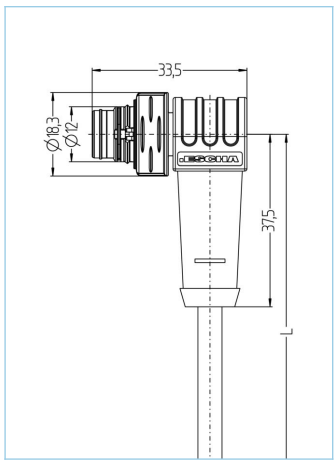

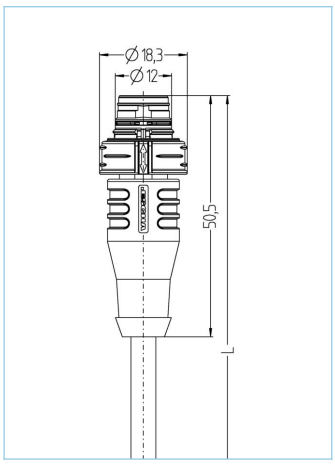





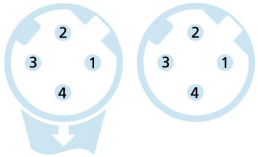

Product data	
Item description	RA-PPIWWASSY4.029-2-RA-PPIWASSY4.029/S4003
Item-No.	8124816
Length	2m
Customs tariff-No.	85444290
Step-File	RA-PPIWWASSY4-L-RA-PPIWASSY4.stp
EAN	4047106350192

Technical data	A-side	B-side
Connector	male, angled, M12 Push-Pull	male, straight, M12 Push-Pull
Number of pins	4	4
Pin assignment	1 YE, 2 WH, 3 OG, 4 BU	1 YE, 2 WH, 3 OG, 4 BU
Coding of	D	D
Rated voltage	60V DC	60V DC
Current load (at 40°C)	4A	4A
Insulation resistance	≥10^8Ω	≥10^8Ω
Resistance	≤ 5mΩ	≤ 5mΩ
Transmission features	Cat5e	Cat5e
Contact material	Metal, CuZn, gold-plated	Metal, CuZn, gold-plated
Contact-carrier material	Plastic, PA, BK	Plastic, PA, BK
Grip body material	Plastic, TPU, BK	Plastic, TPU, BK
Shielding	with shielding	with shielding
Material of shielding housing	Zinc die-cast	Zinc die-cast
Standards	IEC 61076-2-010	IEC 61076-2-010
Mechanical life-cycle	>100 mating cycles	>100 mating cycles
Degree of pollution	3	3

The information contained in this data sheet was compiled with the utmost care. The liability for the correctness, completeness and timelines is limited to gross negligence.

Advanced technical data rail approved	
Standards	DIN EN 50155, DIN EN 45545-2
Shock & vibration	Class 1, Category B (DIN EN 61373)
Degree of protection (mounted)	IP67 (-30°C...+90°C), IP65 (-40°C...+90°C)
Temperature range	Tx (-40°C...+90°C)
Fire prevention according to	DIN EN 45545-2 HL1-3

Cable web	Cat5, RADOX®, 1x4xAWG22, S4003

Halogen-free, electron-beam cross-linked Cat5-cable with improved fire performance. This cable can be used for fixed and protected installation inside of rail vehicles and busses and fullfills the requirements according to EN 45545-2 (HL1 - HL3). It is optimally suited for all Ethernet applications of classes D (ECN) according to IEEE 802.3. For installation the guidelines of EN 50355 and EN 50343 must be considered. Due to its big diameter, this cable is predestined for robust applications. RADOX® is a registered trademark of HUBER+SUHNER AG, Switzerland.

Outer diameter of jacket	7.25 mm
Cable-jacket material	RADOX® EM 104
Jacket color	BK
Wire cross-section	1 x 4 x AWG22, star quad
Wire insulation material	RADOX® COM
Wire colors	WH, BU, OG, YE
Bending radius (fixed)	6xØ cable
Bending radius (repeated)	10xØ cable
Temperature range (fixed)	-50°C...+90°C
Fire prevention according to	DIN EN 45545-2 HL1-3, DIN 5510 fire prevention-levels 1-4, NF F16-101 category A1, A2, B, UNI CEI 11170, danger level LR1-LR4, NFPA 130, UN ECE R 118
Shielding	Yes
Halogen-free	Yes
Transmission features	Cat5e
Special features	increased thermal load, flame retardant, low emission of smoke, halogen free, oil- and fuel resistant, RoHs compliant

Classification	
eCl@ss 6.0	27060307
eCl@ss 7.0	27060307
eCl@ss 8.0	27060307
eCl@ss 9.0	27060307
ETIM 5.0	EC000830
ETIM 6.0	EC000830

Accessories

Marking rings Ø 9mm
https://www.escha.net/en/products/standard/accessories-for-connectivity?p=1&o=3&n=15&f=809