M12, Push-Pull inner locking, male, angled, 4 poles, D-coded, RJ45, male, straight, 4 poles, shielded, Industrial Ethernet 100 MBit/s

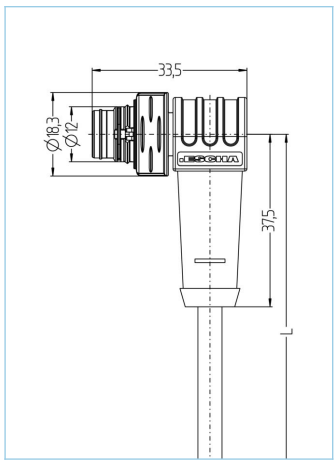


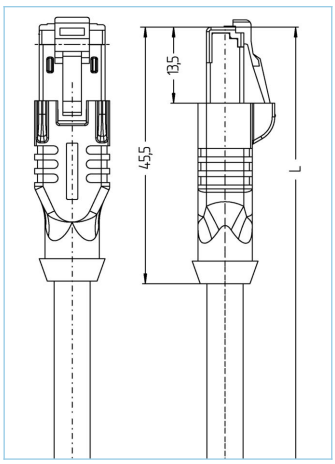




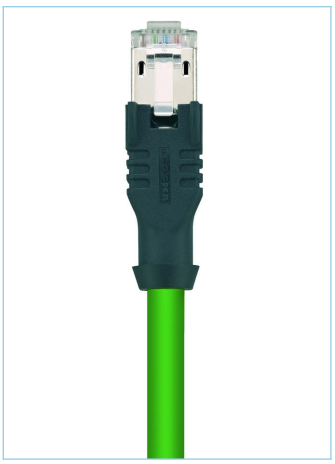

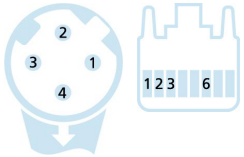


| Product data | |
|---|---|
| Item description | IE-PPIWWASSY4.029-5-IE-RJ45SS4.003/S5100 |
| Item-No. | 8124731 |
| Length | 5m |
| Customs tariff-No. | 85444290 |
| Step-File | IE-PPIWWASSY4-L-IE-RJ45SS4.stp |
| EAN | 4047106351007 |

| Technical data | A-side | B-side |
|---|---|---|
| Connector | male, angled, M12 Push-Pull | male, straight, RJ45 |
| Number of pins | 4 | 4 |
| Pin assignment | 1 YE, 2 WH, 3 OG, 4 BU | 1 YE, 2 OG, 3 WH, 6 BU |
| Coding of | D | |
| Rated voltage | 60V DC | 60V |
| Current load (at 40°C) | 4A | 1A |
| Insulation resistance | ≥10⁸Ω | ≥10⁸Ω |
| Transmission features | Cat5e | Cat5e |
| Ambient temperature product | -30°C...+90°C | -40°C...+70°C |
| Contact material | Metal, CuSn, gold-plated | Metal, CuSn, gold-plated |
| Contact-carrier material | Plastic, TPU, GN | Plastic |
| Grip body material | Plastic, TPU, BK | Plastic, TPU, BK |
| Shielding | with shielding | with shielding |
| Material of shielding housing | Zinc die-cast | Metal, CuZn, nickel-plated |
| Standards | IEC 61076-2-010 | IEC 60603-7-5 |
| Degree of protection (mounted) | IP65, IP67, IP68 | IP20 |
| Mechanical life-cycle | >100 mating cycles | >750 mating cycles |
| Degree of pollution | 3 | 1 |

The information contained in this data sheet was compiled with the utmost care. The liability for the correctness, completeness and timelines is limited to gross negligence.

| Cable web | Cat5e, PUR, UL, S5100, PROFINET Type R |
|---|---|

Shielded, PUR-cable for industrial applications. The cable is UL-verified or meets the Cat5e (electrical properties of EN 50288-2-1) requirements. Materials and a constructive setup allow for increased mechanical stresses (abrasion, bending, vibrations etc.) of the cable. This cable is especially suitable for robotic applications.

| | |
|---|---|
| Outer diameter of jacket | 6.50 mm |
| Cable-jacket material | PUR |
| Jacket color | GN, similar RAL6018 |
| Wire cross-section | 1 x 4 x AWG22, star quad |
| Wire insulation material | PE |
| Wire colors | YE/OG ; WH/BU |
| Wire structure | 19 x 0.15 mm |
| Bending radius (fixed) | 5 x Ø-cable |
| Bending radius (repeated) | 10 x Ø-cable |
| Temperature range (repeated) | -20°C...+80°C |
| Temperature range (fixed) | -40°C...+80°C |
| Drag chain-application | 5 Mio. bending cycles; bending radius 75 mm; maximum acceleration 20 m/s²; maximum horizontal speed 300 m/min; maximum length horizontal of cable 5 m |
| Halogen-free | Yes |
| Torsion | >5 Mio. cycles; ±180°/m |
| Transmission features | Cat5e |
| Rated voltage cable | 600 V UL rating |
| Special features | flame retardant, halogen free, high flexibility, hydrolysis proof, LABS free, microbes resistant, oil resistant, ozone resistant, PROFINET Type R, recyclable, RoHs compliant, acid- and alkali resistant, drag chain-adapted, seawater resistant, torsion resistant, UV resistant |

| Classification | |
|---|---|
| eCl@ss 6.0 | 27060307 |
| eCl@ss 7.0 | 27060307 |
| eCl@ss 8.0 | 27060307 |
| eCl@ss 9.0 | 27060307 |
| ETIM 5.0 | EC000830 |
| ETIM 6.0 | EC000830 |

## Accessories

Marking rings Ø 9mm
https://www.escha.net/en/products/standard/accessories-for-connectivity?p=1&o=3&n=15&f=809

Unlocking clip for RJ45
https://www.escha.net/en/products/standard/accessories-for-connectivity?p=1&o=3&n=15&f=807