M12, Push-Pull inner locking, male, angled, 4 poles, D-coded, M12, Push-Pull inner locking, male, straight, 4 poles, D-coded, shielded, Industrial Ethernet 100 MBit/s

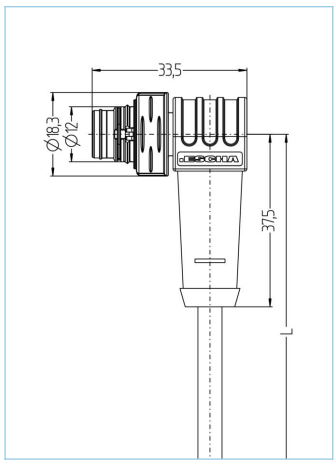

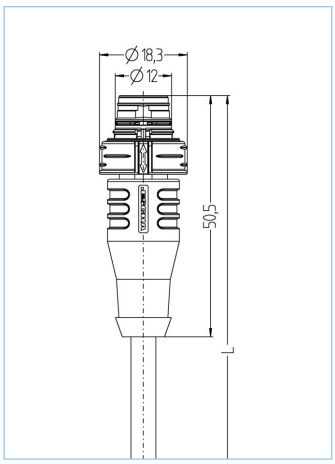





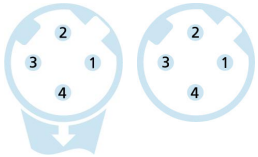

Product data	
Item description	IE-PPIWWASSY4.029-5-IE-PPIWASSY4.029/S5100
Item-No.	8124728
Length	5m
Customs tariff-No.	85444290
Step-File	IE-PPIWWASSY4-L-IE-PPIWASSY4.stp
EAN	4047106350994

Technical data	A-side	B-side
Connector	male, angled, M12 Push-Pull	male, straight, M12 Push-Pull
Number of pins	4	4
Pin assignment	1 YE, 2 WH, 3 OG, 4 BU	1 YE, 2 WH, 3 OG, 4 BU
Coding of	D	D
Rated voltage	60V DC	60V DC
Current load (at 40°C)	4A	4A
Insulation resistance	≥10⁸Ω	≥10⁸Ω
Resistance	≤ 5mΩ	≤ 5mΩ
Transmission features	Cat5e	Cat5e
Ambient temperature product	-30°C...+90°C	-30°C...+90°C
Contact material	Metal, CuSn, gold-plated	Metal, CuSn, gold-plated
Contact-carrier material	Plastic, TPU, GN	Plastic, TPU, GN
Grip body material	Plastic, TPU, BK	Plastic, TPU, BK
Shielding	with shielding	with shielding
Material of shielding housing	Zinc die-cast	Zinc die-cast
Standards	IEC 61076-2-010	IEC 61076-2-010
Degree of protection (mounted)	IP65, IP67, IP68	IP65, IP67, IP68
Mechanical life-cycle	>100 mating cycles	>100 mating cycles
Degree of pollution	3	3

The information contained in this data sheet was compiled with the utmost care. The liability for the correctness, completeness and timelines is limited to gross negligence.

Cable web	Cat5e, PUR, UL, S5100, PROFINET Type R

Shielded, PUR-cable for industrial applications. The cable is UL-verified or meets the Cat5e (electrical properties of EN 50288-2-1) requirements. Materials and a constructive setup allow for increased mechanical stresses (abrasion, bending, vibrations etc.) of the cable. This cable is especially suitable for robotic applications.

Outer diameter of jacket	6.50 mm
Cable-jacket material	PUR
Jacket color	GN, similar RAL6018
Wire cross-section	1 x 4 x AWG22, star quad
Wire insulation material	PE
Wire colors	YE/OG ; WH/BU
Wire structure	19 x 0.15 mm
Bending radius (fixed)	5 x Ø-cable
Bending radius (repeated)	10 x Ø-cable
Temperature range (repeated)	-20°C...+80°C
Temperature range (fixed)	-40°C...+80°C
Drag chain-application	5 Mio. bending cycles; bending radius 75 mm; maximum acceleration 20 m/s²; maximum horizontal speed 300 m/min; maximum length horizontal of cable 5 m
Halogen-free	Yes
Torsion	>5 Mio. cycles; ±180°/m
Transmission features	Cat5e
Rated voltage cable	600 V UL rating
Special features	flame retardant, halogen free, high flexibility, hydrolysis proof, LABS free, microbes resistant, oil resistant, ozone resistant, PROFINET Type R, recyclable, RoHs compliant, acid- and alkali resistant, drag chain-adapted, seawater resistant, torsion resistant, UV resistant

Classification

eCl@ss 6.0	27060307
eCl@ss 7.0	27060307
eCl@ss 8.0	27060307
eCl@ss 9.0	27060307
ETIM 5.0	EC000830
ETIM 6.0	EC000830

Accessories

Marking rings Ø 9mm
https://www.escha.net/en/products/standard/accessories-for-connectivity?p=1&o=3&n=15&f=809