## M12, female, angled, 5 poles, shielded, rail approved

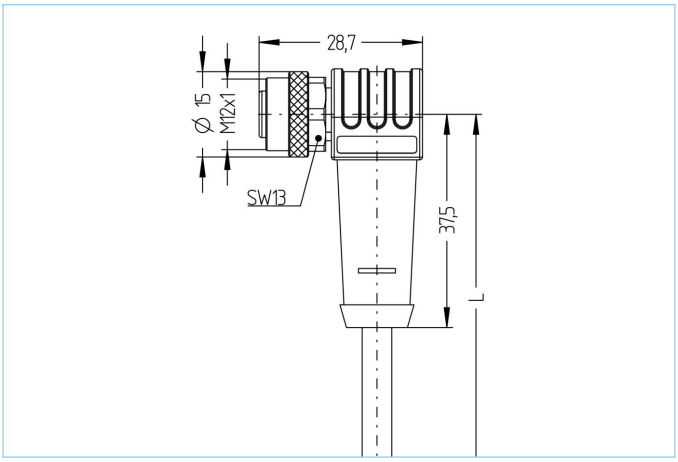




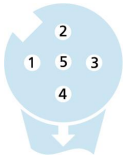


| Product data | |
|---|---|
| Item description | RA-WWAKS5.033-3,5/S5300 |
| Item-No. | 8122329 |
| Length | 3.5m |
| Customs tariff-No. | 85444290 |
| EAN | 4047106341848 |

| Technical data | |
|---|---|
| Connector | female, angled, M12 |
| Number of pins | 5 |
| Pin assignment | 1 WH, 2 BN, 3 GN, 4 YE, 5 GY |
| Coding | A |
| Rated voltage | 60V |
| Current load per pin (at 40°C) | 4A |
| Insulation resistance | ≥$10^8$Ω |
| Resistance | ≤ 5mΩ |
| Contact material | Metal, CuZn, gold-plated |
| Contact-carrier material | Plastic, PA, BK |
| Grip body material | Plastic, TPU, BK |
| Coupling nut material | Metal, CuZn, nickel-plated |
| Sealing (female) material | FPM/FKM |
| Shielding | with shielding |
| Standards | IEC 61076-2-101 |
| Mechanical life-cycle | >100 mating cycles |
| Cable end assembly | open cable end |
| Degree of pollution | 3 |
| Style | angled |

The information contained in this data sheet was compiled with the utmost care. The liability for the correctness, completeness and timelines is limited to gross negligence.

| Advanced technical data rail approved | |
|---|---|
| Standards | DIN EN 50155, DIN EN 45545-2 |
| Shock & vibration | Class 1, Category B (DIN EN 61373) |
| Degree of protection (mounted) | IP67 (-30°C...+90°C), IP65 (-40°C...+90°C) |
| Temperature range | Tx (-40°C...+90°C) |
| Fire prevention according to | DIN EN 45545-2 HL1-3 |

| Cable web | SABIX®, 5x0,50 mm², S5300 |
|---|---|

Halogen-free cable with improved behaviour in case of fire, easy to strip, flame retardant and self-extinguishing. The cable is intended for fixed, mechanically protected installation in railway vehicles. The cable fulfils the requirements according EN 45545-2 (HL1 - HL3). It is characterized by a wide temperature range. SABIX® is a registered trademark of SAB Bröckskes GmbH & Co. KG, Germany.

| | |
|---|---|
| Outer diameter of jacket | 6.3 mm |
| Cable-jacket material | SABIX® |
| Jacket color | GY, similar RAL7032 |
| Wire cross-section | 5 x 0.50 mm² |
| Wire insulation material | SABIX® |
| Wire colors | WH, BN, GN, YE, GY |
| Wire structure | 15 x 0,20 mm |
| Bending radius (fixed) | 5xØ-cable |
| Bending radius (repeated) | 10xØ-cable |
| Temperature range (repeated) | -30°C...+90°C |
| Temperature range (fixed) | -40°C...+90°C |
| Fire prevention according to | DIN EN 45545-2 HL1-3 |
| Shielding | Yes |
| Halogen-free | Yes |
| Special features | flame retardant, halogen free, RoHs compliant, self-extinguishing |

| Classification | |
|---|---|
| eCl@ss 6.0 | 27279218 |
| eCl@ss 7.0 | 27279218 |
| eCl@ss 8.0 | 27279218 |
| eCl@ss 9.0 | 27060311 |
| ETIM 5.0 | EC001855 |
| ETIM 6.0 | EC001855 |

## Accessories

Torque-wrench set
https://www.escha.net/en/products/standard/accessories-for-connectivity/8055431

Marking rings Ø 9mm
https://www.escha.net/en/products/standard/accessories-for-connectivity?p=1&o=3&n=15&f=809

Cable Stripping Tool
https://www.escha.net/en/products/standard/accessories-for-connectivity/8066215

Screw plug, M12
https://www.escha.net/en/products/standard/accessories-for-connectivity?p=1&o=3&n=15&f=812

Mounting-clip, M12
https://www.escha.net/en/products/standard/accessories-for-connectivity/8047660

Mounting-set, M12
https://www.escha.net/en/products/standard/accessories-for-connectivity/8047664

Safety-clip, M12

The information contained in this data sheet was compiled with the utmost care. The liability for the correctness, completeness and timelines is limited to gross negligence.