M12, female, angled, 5 poles, shielded, rail approved

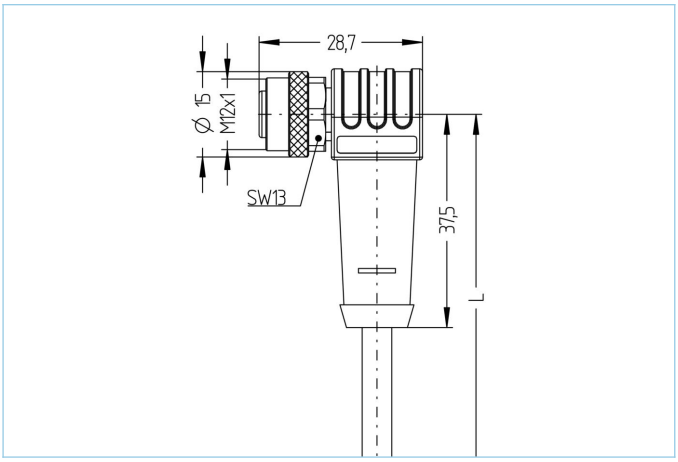



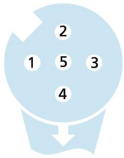

Product data	
Item description	RA-WWAKS5.033-2/S5300
Item-No.	8121885
Length	2m
Customs tariff-No.	85444290
EAN	4047106339968

Technical data	
Connector	female, angled, M12
Number of pins	5
Pin assignment	1 WH, 2 BN, 3 GN, 4 YE, 5 GY
Coding	A
Rated voltage	60V
Current load per pin (at 40°C)	4A
Insulation resistance	≥10^8Ω
Resistance	≤ 5mΩ
Contact material	Metal, CuZn, gold-plated
Contact-carrier material	Plastic, PA, BK
Grip body material	Plastic, TPU, BK
Coupling nut material	Metal, CuZn, nickel-plated
Sealing (female) material	FPM/FKM
Shielding	with shielding
Standards	IEC 61076-2-101
Mechanical life-cycle	>100 mating cycles
Cable end assembly	open cable end
Degree of pollution	3
Style	angled

The information contained in this data sheet was compiled with the utmost care. The liability for the correctness, completeness and timelines is limited to gross negligence.

Advanced technical data rail approved	
Standards	DIN EN 50155, DIN EN 45545-2
Shock & vibration	Class 1, Category B (DIN EN 61373)
Degree of protection (mounted)	IP67 (-30°C...+90°C), IP65 (-40°C...+90°C)
Temperature range	Tx (-40°C...+90°C)
Fire prevention according to	DIN EN 45545-2 HL1-3

Cable web	SABIX®, 5x0,50 mm², S5300

Halogen-free cable with improved behaviour in case of fire, easy to strip, flame retardant and self-extinguishing. The cable is intended for fixed, mechanically protected installation in railway vehicles. The cable fulfils the requirements according EN 45545-2 (HL1 - HL3). It is characterized by a wide temperature range. SABIX® is a registered trademark of SAB Bröckskes GmbH & Co. KG, Germany.

Outer diameter of jacket	6.3 mm
Cable-jacket material	SABIX®
Jacket color	GY, similar RAL7032
Wire cross-section	5 x 0.50 mm²
Wire insulation material	SABIX®
Wire colors	WH, BN, GN, YE, GY
Wire structure	15 x 0,20 mm
Bending radius (fixed)	5xØ-cable
Bending radius (repeated)	10xØ-cable
Temperature range (repeated)	-30°C...+90°C
Temperature range (fixed)	-40°C...+90°C
Fire prevention according to	DIN EN 45545-2 HL1-3
Shielding	Yes
Halogen-free	Yes
Special features	flame retardant, halogen free, RoHs compliant, self-extinguishing

Classification	
eCl@ss 6.0	27279218
eCl@ss 7.0	27279218
eCl@ss 8.0	27279218
eCl@ss 9.0	27060311
ETIM 5.0	EC001855
ETIM 6.0	EC001855

Accessories

Torque-wrench set
https://www.escha.net/en/products/standard/accessories-for-connectivity/8055431

Marking rings Ø 9mm
https://www.escha.net/en/products/standard/accessories-for-connectivity?p=1&o=3&n=15&f=809

Cable Stripping Tool
https://www.escha.net/en/products/standard/accessories-for-connectivity/8066215

Screw plug, M12
https://www.escha.net/en/products/standard/accessories-for-connectivity?p=1&o=3&n=15&f=812

Mounting-clip, M12
https://www.escha.net/en/products/standard/accessories-for-connectivity/8047660

Mounting-set, M12
https://www.escha.net/en/products/standard/accessories-for-connectivity/8047664

Safety-clip, M12

The information contained in this data sheet was compiled with the utmost care. The liability for the correctness, completeness and timelines is limited to gross negligence.