M12, male, straight, 5 poles, shielded, CANopen/DeviceNet

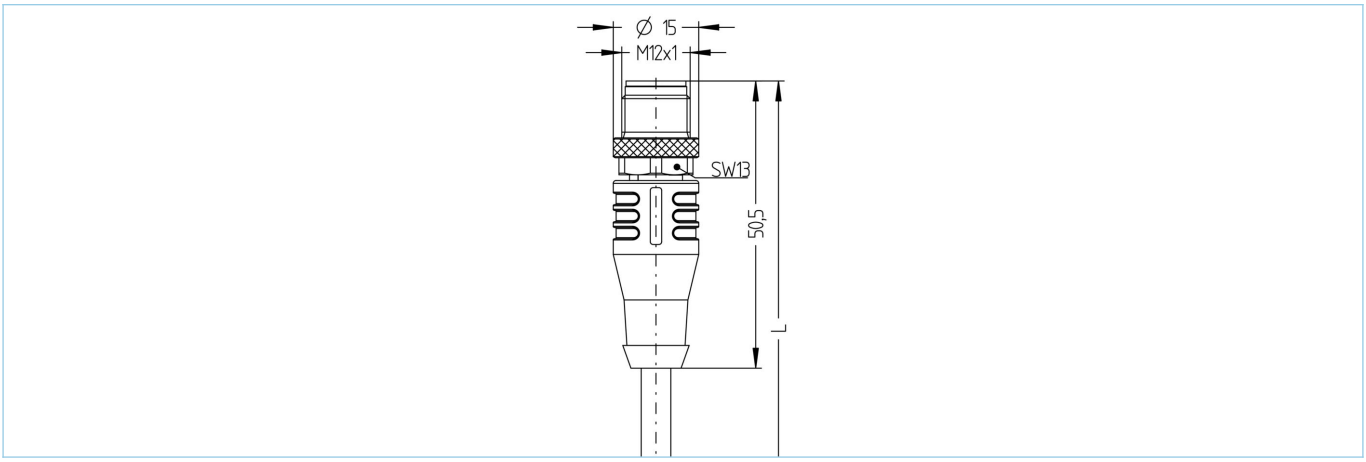

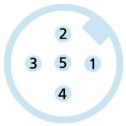

Product data	
Item description	CD-WASS5.022-1,5/S2800
Item-No.	8117612
Length	1.5m
Customs tariff-No.	85444290
EAN	4047106326548

Technical data	
Connector	male, straight, M12
Number of pins	5
Pin assignment	1 (GND), 2 RD (+), 3 BK (-), 4 WH (CAN_H), 5 BU (CAN_L)
Coding	A
Rated voltage	60V
Current load per pin (at 40°C)	4A
Insulation resistance	≥10^8Ω
Resistance	≤ 5mΩ
Ambient temperature product	-30°C...+90°C
Contact material	Metal, CuZn, gold-plated
Contact-carrier material	Plastic, TPU, BK
Grip body material	Plastic, TPU, BK
Coupling nut material	Metal, CuZn, nickel-plated
Shielding	with shielding
Standards	IEC 61076-2-101
Degree of protection (mounted)	IP65, IP67, IP68
Mechanical life-cycle	>100 mating cycles
Cable end assembly	open cable end
Degree of pollution	3
Style	straight

The information contained in this data sheet was compiled with the utmost care. The liability for the correctness, completeness and timelines is limited to gross negligence.

Cable web	PUR, UL, S2800, CANopen/DeviceNet

UL- and CSA-listed shielded PUR-cable for automation technology. As a data transmitter, it supports CANopen as well as DeviceNetbased fieldbuses. High transmission rates enable transport of real-time data. Due to the constructive setup and the materials used, increased mechanical stresses (abrasion, bending, vibrations etc.) do not pose any restrictions to the application. Drag-chain application is possible. (>2.5million bending cycles).

Outer diameter of jacket	6.90 mm
Cable-jacket material	PUR
Jacket color	BK, similar RAL9005
Wire cross-section	2 x 0.25 mm²+ 2 x 0.34 mm²
Wire insulation material	PE/PP
Wire colors	WH, BU, RD, BK
Wire structure	19 x 0.13mm (0.25mm²), 19 x 0.15mm (0.34mm²)
Bending radius (fixed)	5 x Ø-cable
Bending radius (repeated)	10 x Ø-cable
Temperature range (repeated)	-25°C...+80°C
Temperature range (fixed)	-50°C...+80°C
Drag chain-application	>2.5Mio. cycles
Shielding	Yes, with stranded wire
Halogen-free	Yes
Rated voltage cable	≤300 V
Special features	flame retardant, halogen free, hydrolysis proof, LABS free, microbes resistant, oil resistant, ozone resistant, recyclable, RoHs compliant, acid- and alkali resistant, drag chain-adapted, seawater resistant, UV resistant

Accessories

Mounting-clip, M12
https://www.escha.net/en/products/standard/accessories-for-connectivity/8047660

Torque-wrench set
https://www.escha.net/en/products/standard/accessories-for-connectivity/8055431

Marking rings Ø 9mm
https://www.escha.net/en/products/standard/accessories-for-connectivity?p=1&o=3&n=15&f=809

Screw cap, M12
https://www.escha.net/en/products/standard/accessories-for-connectivity?p=1&o=3&n=15&f=811

Cable Stripping Tool
https://www.escha.net/en/products/standard/accessories-for-connectivity/8066215

Cable Stripping Tool
https://www.escha.net/en/products/standard/accessories-for-connectivity/8066216