M8, female, angled, 8 poles, shielded, sensor-/actuator cable

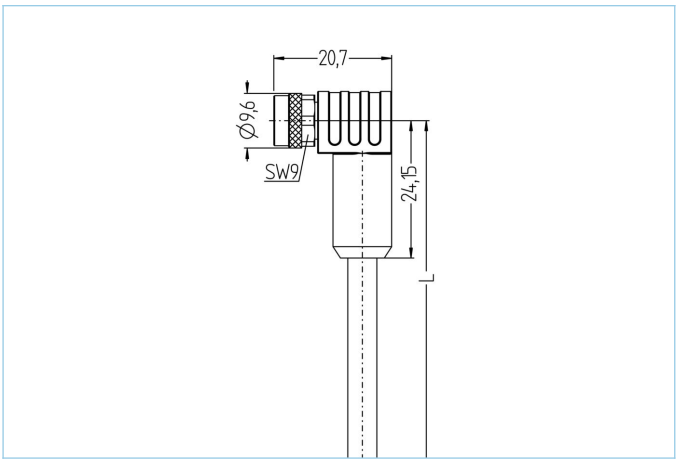





Product data	
Item description	AL-SWKPS8-10/P00
Item-No.	8114988
Length	10m
Customs tariff-No.	85444290
Step-File	AL-SWKPS8-m.stp
EAN	4047106317201

Technical data	
Connector	female, angled, M8
Number of pins	8
Pin assignment	1 WH, 2 BN, 3 GN, 4 YE, 5 GY, 6 PK, 7 BU, 8 RD
Rated voltage	30V
Current load per pin (at 40°C)	1.5A
Insulation resistance	≥10^8Ω
Resistance	≤ 5mΩ
Ambient temperature product	-30°C...+90°C
Contact material	Metal, CuZn, gold-plated
Contact-carrier material	Plastic, TPU, BK
Grip body material	Plastic, TPU, BK
Coupling nut material	Metal, CuZn, nickel-plated
Sealing (female) material	FPM/FKM
Shielding	with shielding
Standards	IEC 61076-2-104
Degree of protection (mounted)	IP65, IP67, IP68
Mechanical life-cycle	>100 mating cycles
Cable end assembly	open cable end
Degree of pollution	3
Style	angled

The information contained in this data sheet was compiled with the utmost care. The liability for the correctness, completeness and timelines is limited to gross negligence.

Cable web	PVC, P00, GY

PVC-cable for measurement and control-, and sensor technology. Suitable for applications in dry areas on packaging machines, assembly- and conveyor technology. High flexibility with unstressed movement (conditional drag-chain application possible). Predestined for applications in food- and beverage industry. Very good EMC-features with shielded versions.

Outer diameter of jacket	6.70 mm
Cable-jacket material	PVC
Jacket color	GY, similar RAL7040
Wire cross-section	8 x 0.25 mm²
Wire insulation material	PVC
Wire colors	WH, BN, GN, YE, GY, PK, BU, RD
Wire structure	14 x 0.15 mm
Bending radius (fixed)	5 x Ø-cable
Bending radius (repeated)	10 x Ø-cable
Temperature range (repeated)	0°C...+80°C
Temperature range (fixed)	-25°C...+80°C
Shielding	Yes
Rated voltage cable	≤300 V
Special features	good resistance against oils and chemicals, hydrolysis proof, LABS free, ozone resistant, recyclable, RoHs compliant, acid- and alkali resistant, sea-water resistant, UV resistant

Classification

eCl@ss 6.0	27279218
eCl@ss 7.0	27279218
eCl@ss 8.0	27279218
eCl@ss 9.0	27060311
ETIM 5.0	EC001855
ETIM 6.0	EC001855

Accessories

Mounting-clip, M8
https://www.escha.net/en/products/standard/accessories-for-connectivity/8047658

Torque-wrench set
https://www.escha.net/en/products/standard/accessories-for-connectivity/8055431

Screw plug, M8
https://www.escha.net/en/products/standard/accessories-for-connectivity/8081771

Cable Stripping Tool
https://www.escha.net/en/products/standard/accessories-for-connectivity/8066215

Cable Stripping Tool
https://www.escha.net/en/products/standard/accessories-for-connectivity/8066216

Mounting-set, M8
https://www.escha.net/en/products/standard/accessories-for-connectivity/8047663

Link to product

https://www.escha.net/en/products/standard/sensoractuator-connectors/8114988