Receptacle Single-ended cordset, M12, female, straight, 4 poles, D-coded, back wall-mounting, shielded, Industrial Ethernet

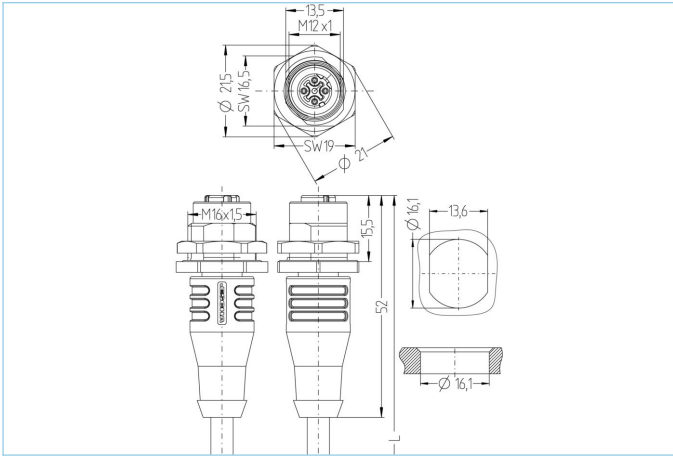

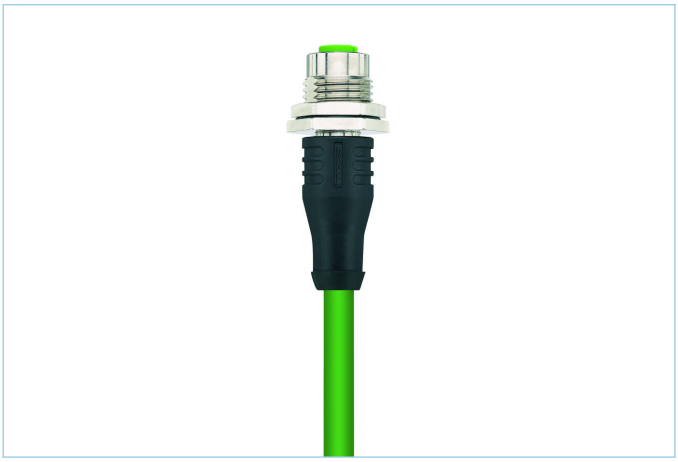

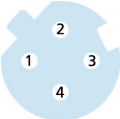

Product data	
Item description	IE-FKFDSY4.029-10/16/S5200
Item-No.	8101304
Length	10m
Customs tariff-No.	85444290
Step-File	IE-FKFDSY4_029-m_16.stp
EAN	4047106284619

Technical data	
Connector	female, straight, M12
Number of pins	4
Pin assignment	1 YE, 2 WH, 3 OG, 4 BU
Coding	D
Rated voltage	250V
Current load per pin (at 40°C)	4A
Insulation resistance	≥10^8Ω
Transmission features	Cat5e
Ambient temperature product	-30°C...+90°C
Contact material	Metal, CuZn, gold-plated
Contact-carrier material	Plastic, TPU, GN
Grip body material	Plastic, TPU, BK
Receptacle housing material	Metal, CuZn, nickel-plated
Sealing (female) material	FPM/FKM
Material of external sealing	NBR
Shielding	with shielding
Mounting direction	Back wall-mounting (incl. Fixing screw)
Adjustable fixing screw	Yes
Fastening thread	M16x1.5

Connecting type	Cable
Standards	IEC 61076-2-101
Degree of protection (mounted)	IP65, IP67, IP68
Mechanical life-cycle	>100 mating cycles
Degree of pollution	3
Style	straight

Cable web — Cat5e, PVC, UL, S5200, PROFINET

Shielded, PVC-cable for industrial applications. The cable is AWM-Style 21694 verified or meets the Cat5e (electrical properties of EN 50288-2-1) requirements.

Outer diameter of jacket	6.50 mm
Cable-jacket material	PVC
Jacket color	GN, similar RAL6018
Wire cross-section	1 x 4 x AWG22, star quad
Wire insulation material	PVC
Wire colors	WH, BU, OG, YE
Wire structure	7 x 0.25 mm
Bending radius (fixed)	3 x Ø-cable
Bending radius (repeated)	7 x Ø-cable
Temperature range (repeated)	-40°C...+80°C
Temperature range (fixed)	-20°C...+60°C
Shielding	with shielding
Halogen-free	No
UL AWM style	UL AWM 21694
Transmission features	Cat5e
Rated voltage cable	600 V UL rating
Special features	flame retardant, high flexibility, microbes resistant, oil resistant, oil- and fuel resistant, ozone resistant, PROFINET Type B, recyclable, RoHs compliant, acid- and alkali resistant, seawater resistant, UV resistant

Classification

eCl@ss 6.0	27279220
eCl@ss 7.0	27440103
eCl@ss 8.0	27440103
eCl@ss 9.0	27440103
ETIM 5.0	EC002061
ETIM 6.0	EC002061

Link to product

https://www.escha.net/en/products/standard/data-connectors/8101304