Y-splitter, M12, male, straight, 4+PE, with open cable end

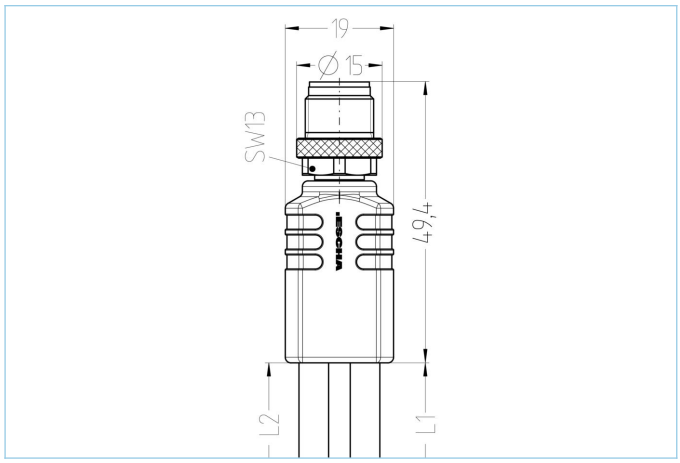



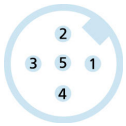

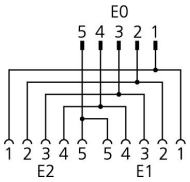

Product data	
Item description	YK-FS5M12-2/2/S370
Item-No.	8094583
Length	2m
Customs tariff-No.	85444290
EAN	4047106305390

Technical data	Exit 0	Exit 1	Exit 2
Connector	male, M12, straight	open cable end	open cable end
Contact material	Metal, CuZn, gold-plated		
Contact-carrier material	Plastic, TPU, BK		
Coupling nut material	Metal, CuZn, nickel-plated		
Rated voltage	60V		
Coding of	A		
Number of pins	5		
Current load (at 40°C)	4A		

Pin assignment	1 BN, 2 WH, 3 BU, 4 BK, 5 GN/YE
Insulation resistance	>=10^8Ω
Resistance	≤ 5mΩ
Ambient temperature product	-30°C...+90°C
Grip body material	Plastic, TPU, BK
Mechanical life-cycle	>100 mating cycles
Standards	IEC 61076-2-101
Degree of protection (mounted)	IP65, IP67, IP68
Cable end assembly	open cable end
Degree of pollution	3

The information contained in this data sheet was compiled with the utmost care. The liability for the correctness, completeness and timelines is limited to gross negligence.

Cable web	PUR, UL, S370

Flexible, silicone- and halogen-free control line with high mechanical strength. The cable is chemicals, hydrolysis-, and microbes- resistant. The drag-chain application is possible at a bending radius of minimum 10 x d. Due to its weld-field immunity, the cable is very well suited for the flexible application in robotics, machine-tool, and metal-cutting production. The cables meet the UL and CSA (UL10493/20549; cULus) requirements.

Outer diameter of jacket	5.20 mm
Cable-jacket material	PUR
Jacket color	BK, similar RAL9005
Wire cross-section	5 x 0.34 mm²
Wire insulation material	PP
Wire colors	BN, WH, BU, BK, GNYE
Wire structure	42 x 0.10 mm
Bending radius (fixed)	5 x Ø-cable
Bending radius (repeated)	10 x Ø-cable
Temperature range (repeated)	-30°C...+90°C
Temperature range (fixed)	-40°C...+90°C
Temperature range (drag chain)	-25°C…+60°C
Drag chain-application	3 Mio. cycles
Halogen-free	Yes
Torsion	+/-180°/m, < 1 Mio. cycles
Rated voltage cable	≤300 V
Special features	flame retardant, halogen free, hydrolysis proof, LABS free, oil resistant, ozone resistant, recyclable, RoHs compliant, acid- and alkali resistant, drag chain-adapted, welding sparks resistant, seawater resistant, silicone free, torsion resistant, UV resistant

Classification	
eCl@ss 6.0	27279218
eCl@ss 7.0	27279218
eCl@ss 8.0	27279218
eCl@ss 9.0	27060313
ETIM 5.0	EC001855
ETIM 6.0	EC001855

The information contained in this data sheet was compiled with the utmost care. The liability for the correctness, completeness and timelines is limited to gross negligence.