M12, female, straight, 8 poles, M12, male, angled, 8 poles, shielded, rail approved

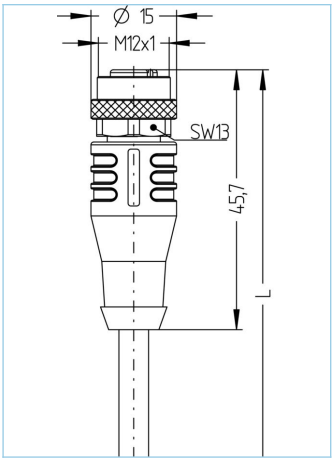

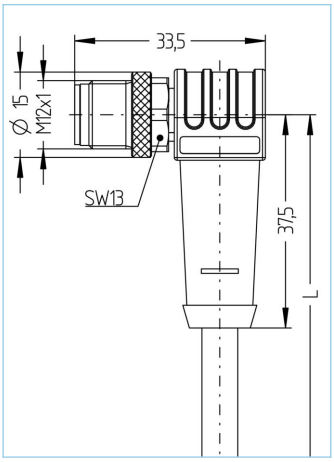

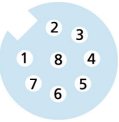

Product data	
Item description	RA-WAKS8-5-RA-WWASS8/S5550
Item-No.	8093751
Length	5m
Customs tariff-No.	85444290
EAN	4047106266578

Technical data	A-side	B-side
Connector	female, straight, M12	male, angled, M12
Number of pins	8	8
Pin assignment	1 WH, 2 BN, 3 GN, 4 YE, 5 GY, 6 PK, 7 BU, 8 RD	1 WH, 2 BN, 3 GN, 4 YE, 5 GY, 6 PK, 7 BU, 8 RD
Coding of	A	A
Rated voltage	30V	30V
Current load (at 40°C)	2A	2A
Insulation resistance	≥10^8Ω	≥10^8Ω
Resistance	≤ 5mΩ	≤ 5mΩ
Contact material	Metal, CuZn, gold-plated	Metal, CuZn, gold-plated
Contact-carrier material	Plastic, PA, BK	Plastic, PA, BK
Grip body material	Plastic, TPU, BK	Plastic, TPU, BK
Coupling nut material	Metal, CuZn, nickel-plated	Metal, CuZn, nickel-plated
Sealing (female) material	FPM/FKM	
Shielding	with shielding	with shielding
Standards	IEC 61076-2-101	IEC 61076-2-101
Mechanical life-cycle	>100 mating cycles	>100 mating cycles
Degree of pollution	3	3

Advanced technical data rail approved	
Standards	DIN EN 50155, DIN EN 45545-2
Shock & vibration	Class 1, Category B (DIN EN 61373)
Degree of protection (mounted)	IP67 (-30°C...+90°C), IP65 (-40°C...+90°C)
Temperature range	Tx (-40°C...+90°C)
Fire prevention according to	DIN EN 45545-2 HL1-3

The information contained in this data sheet was compiled with the utmost care. The liability for the correctness, completeness and timelines is limited to gross negligence.

Cable web	SABIX®, 8x0.25 mm², S5550

Halogen-free cable with improved behaviour in case of fire, easy to strip, flame retardant and self-extinguishing. The cable is intended for fixed, mechanically protected installation in railway vehicles. The cable fulfils the requirements according EN 45545-2 (HL1 - HL3). It is characterized by a wide temperature range. SABIX® is a registered trademark of SAB Bröckskes GmbH & Co. KG, Germany.

Outer diameter of jacket	5.2 mm
Cable-jacket material	SABIX®
Jacket color	GY, similar RAL7032
Wire cross-section	8 x 0.25 mm²
Wire insulation material	SABIX®
Wire colors	WH, BN, GN, YE, GY, PK, BU, RD
Wire structure	14 x 0.15 mm
Bending radius (fixed)	5xØ-cable
Bending radius (repeated)	10xØ-cable
Temperature range (repeated)	-30°C...+90°C
Temperature range (fixed)	-40°C...+90°C
Fire prevention according to	DIN EN 45545-2 HL1-3
Halogen-free	Yes
Special features	flame retardant, halogen free, RoHs compliant, self-extinguishing

Classification

eCl@ss 6.0	27279218
eCl@ss 7.0	27279218
eCl@ss 8.0	27279218
eCl@ss 9.0	27060311
ETIM 5.0	EC001855
ETIM 6.0	EC001855

Accessories

Torque-wrench set
https://www.escha.net/en/products/standard/accessories-for-connectivity/8055431

Marking rings Ø 9mm
https://www.escha.net/en/products/standard/accessories-for-connectivity?p=1&o=3&n=15&f=809

Screw plug, M12
https://www.escha.net/en/products/standard/accessories-for-connectivity?p=1&o=3&n=15&f=812

Screw cap, M12
https://www.escha.net/en/products/standard/accessories-for-connectivity?p=1&o=3&n=15&f=811

Mounting-clip, M12
https://www.escha.net/en/products/standard/accessories-for-connectivity/8047660

Mounting-set, M12
https://www.escha.net/en/products/standard/accessories-for-connectivity/8047664

Safety-clip, M12

Link to product

https://www.escha.net/en/products/standard/connectors-for-bus-and-rail/8093751

The information contained in this data sheet was compiled with the utmost care. The liability for the correctness, completeness and timelines is limited to gross negligence.