M8, male, angled, 4 poles, D-coded, shielded, Industrial Ethernet

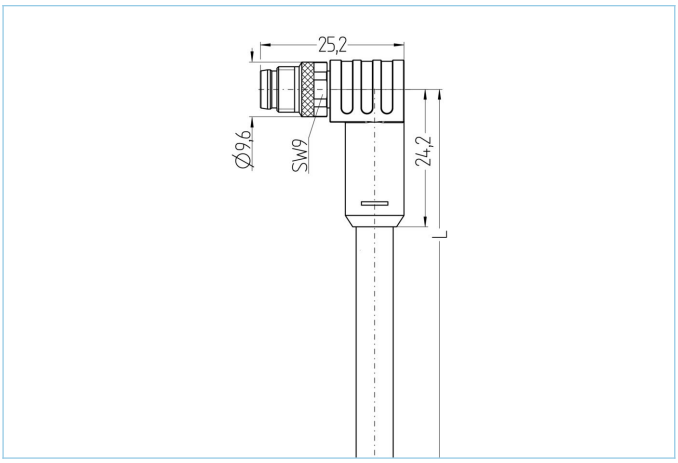

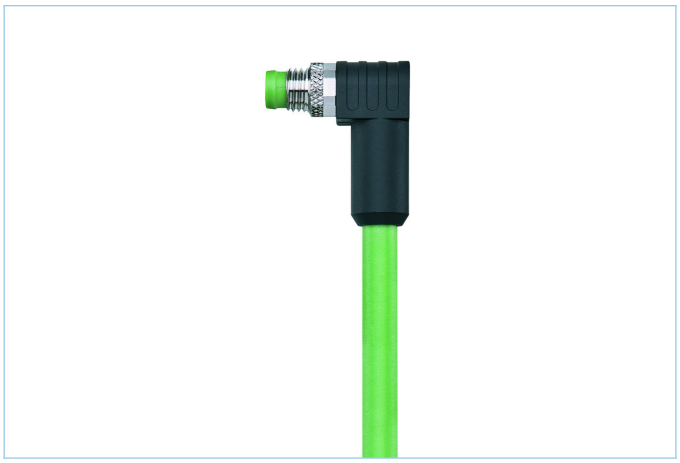

Product data	
Item description	IE-SWSPSD4.073-2/S5100
Item-No.	8092573
Length	2m
Customs tariff-No.	85444290
Step-File	IE-SWSPSD4-m_S2171.stp
EAN	4047106258559

Technical data	
Connector	male, angled, M8
Number of pins	4
Pin assignment	1 YE, 2 WH, 3 OG, 4 BU
Coding	D
Rated voltage	$50V_{AC}$ | $60V_{DC}$
Current load per pin (at 40°C)	4A
Insulation resistance	$\geq 10^8\Omega$
Resistance	≤ 5mΩ
Transmission features	Cat5e
Ambient temperature product	-30°C...+90°C
Contact material	Metal, CuZn, gold-plated
Contact-carrier material	Plastic, PA, BK
Grip body material	Plastic, TPU, BK
Coupling nut material	Metal, CuZn, nickel-plated
Shielding	with shielding
Standards	IEC 61076-2-114
Degree of protection (mounted)	IP65, IP67, IP68
Mechanical life-cycle	>100 mating cycles
Cable end assembly	open cable end
Degree of pollution	3
Style	angled

The information contained in this data sheet was compiled with the utmost care. The liability for the correctness, completeness and timelines is limited to gross negligence.

Cable web	Cat5e, PUR, UL, S5100, PROFINET Type R

Shielded, PUR-cable for industrial applications. The cable is UL-verified or meets the Cat5e (electrical properties of EN 50288-2-1) requirements. Materials and a constructive setup allow for increased mechanical stresses (abrasion, bending, vibrations etc.) of the cable. This cable is especially suitable for robotic applications.

Outer diameter of jacket	6.50 mm
Cable-jacket material	PUR
Jacket color	GN, similar RAL6018
Wire cross-section	1 x 4 x AWG22, star quad
Wire insulation material	PE
Wire colors	YE/OG ; WH/BU
Wire structure	19 x 0.15 mm
Bending radius (fixed)	5 x Ø-cable
Bending radius (repeated)	10 x Ø-cable
Temperature range (repeated)	-20°C...+80°C
Temperature range (fixed)	-40°C...+80°C
Drag chain-application	5 Mio. bending cycles
Halogen-free	Yes
Torsion	>5 Mio. cycles
Transmission features	Cat5e
Rated voltage cable	600 V UL rating
Special features	flame retardant, halogen free, high flexibility, hydrolysis proof, LABS free, microbes resistant, oil resistant, ozone resistant, PROFINET Type R, recyclable, RoHs compliant, acid- and alkali resistant, drag chain-adapted, seawater resistant, torsion resistant, UV resistant

Classification

eCl@ss 6.0	27060307
eCl@ss 7.0	27060307
eCl@ss 8.0	27060307
eCl@ss 9.0	27060307
ETIM 5.0	EC000830
ETIM 6.0	EC000830

Accessories

Mounting-clip, M8
https://www.escha.net/en/products/standard/accessories-for-connectivity/8047658

Torque-wrench set
https://www.escha.net/en/products/standard/accessories-for-connectivity/8055431

Marking rings Ø 9mm
https://www.escha.net/en/products/standard/accessories-for-connectivity?p=1&o=3&n=15&f=809

Screw cap, M8
https://www.escha.net/en/products/standard/accessories-for-connectivity/8081761

Cable Stripping Tool
https://www.escha.net/en/products/standard/accessories-for-connectivity/8066215

Cable Stripping Tool
https://www.escha.net/en/products/standard/accessories-for-connectivity/8066216

Link to product

https://www.escha.net/en/products/standard/data-connectors/8092573