Receptacle, M8, male, angled, 4 poles, D-coded, back wall-mounting, print contact, shielded, Industrial Ethernet

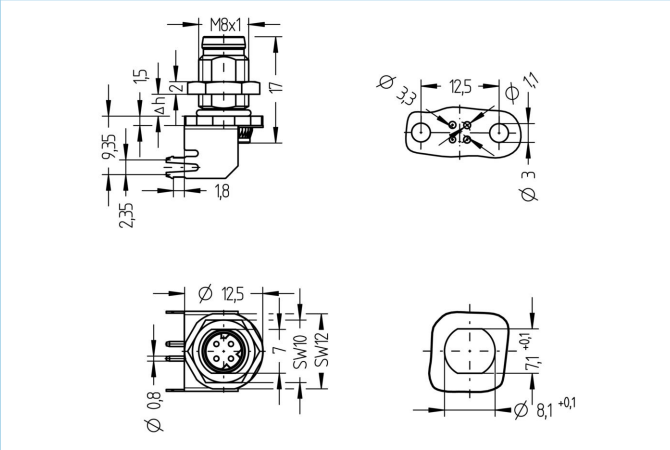

Product data	
Item description	IE-WFHM8SSD4-P/M8
Item-No.	8089340
Customs tariff-No.	85366990
Packaging unit	10
EAN	4047106257309

Technical data	
Connector	male, angled, M8
Number of pins	4
Coding	D
Rated voltage	50V_{AC} | 60V_{DC}
Current load per pin (at 40°C)	4A
Insulation resistance	≥10^8Ω
Transmission features	Cat5e
Ambient temperature product	-30°C...+90°C
Contact material	Metal, CuZn, gold-plated
Contact-carrier material	Plastic, PA GF, GN
Receptacle housing material	Metal, CuZn, nickel-plated
Material of external sealing	FPM/FKM
Mounting direction	Back wall-mounting (incl. Fixing screw)
Fastening thread	M8x1
Connecting type	Print contact
Standards	IEC 61076-2-114
Degree of protection (mounted)	IP65, IP67, IP68
Mechanical life-cycle	>100 mating cycles
Degree of pollution	3
Style	angled

The information contained in this data sheet was compiled with the utmost care. The liability for the correctness, completeness and timelines is limited to gross negligence.

Classification	
eCl@ss 6.0	27279220
eCl@ss 7.0	27440103
eCl@ss 8.0	27440103
eCl@ss 9.0	27440103
ETIM 5.0	EC002061
ETIM 6.0	EC002061

Link to product

https://www.escha.net/en/products/standard/receptacles/8089340