Receptacle, M12, male, straight, 4+PE, K-coded, front wall-mounting, wire contact, POWER

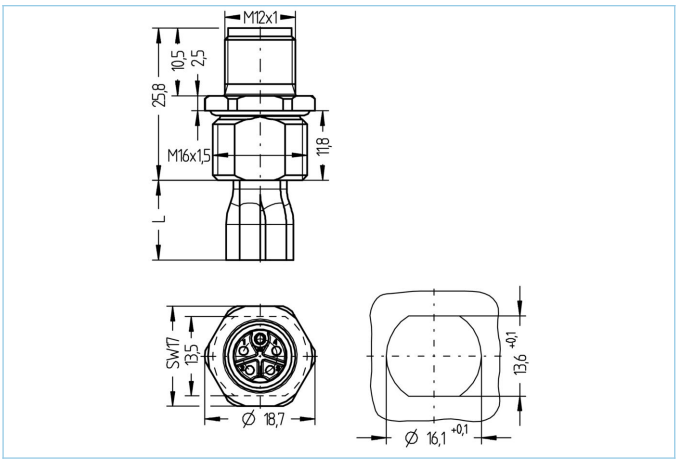


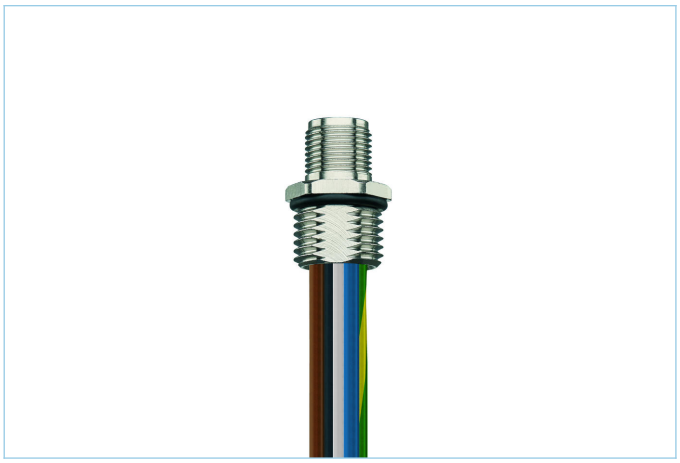

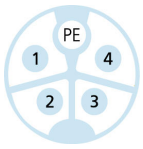


| Product data | |
|---|---|
| Item description | PK-FVM12SU5.244-0,2/M16/S5025 |
| Item-No. | 8086174 |
| Customs tariff-No. | 85444290 |
| Packaging unit | 5 |
| Step-File | PK-FVM12SU5-m_M16.stp |
| EAN | 4047106257231 |

| Technical data | |
|---|---|
| Connector | male, straight, M12 |
| Number of pins | 4+PE |
| Coding | K |
| Rated voltage | 630V$_{AC}$ \| 600V$_{AC}$ (UL) |
| Current load per pin (at 40°C) | 12A |
| Resistance | ≤ 3mΩ |
| Ambient temperature product | -30°C...+90°C |
| Contact material | Metal, CuZn, gold-plated |
| Contact-carrier material | Plastic, PA, BK |
| Receptacle housing material | Metal, CuZn, nickel-plated |
| Sealing (female) material | FPM/FKM |
| Mounting direction | Front wall-mounting (without fixing screw) |
| Wire length | 0.20m |
| Wire colors | BU, GY, BN, BK, GNYE |
| Wire cross-section | 5 x 2.5 mm² |
| Wire insulation material | PVC |
| Fastening thread | M16x1.5 |

The information contained in this data sheet was compiled with the utmost care. The liability for the correctness, completeness and timelines is limited to gross negligence.

| | |
|---|---|
| Connecting type | Wire contact |
| Standards | IEC 61076-2-111 |
| Degree of protection (mounted) | IP65, IP67, IP68 |
| Mechanical life-cycle | >100 mating cycles |
| Degree of pollution | 3 |
| Style | straight |

## Classification

| | |
|---|---|
| eCl@ss 6.0 | 27279220 |
| eCl@ss 7.0 | 27440103 |
| eCl@ss 8.0 | 27440103 |
| eCl@ss 9.0 | 27440103 |
| ETIM 5.0 | EC002061 |
| ETIM 6.0 | EC002061 |

## Link to product

https://www.escha.net/en/products/standard/power-connectors/8086174