M12, male, straight, 5 poles, sensor-/actuator cable

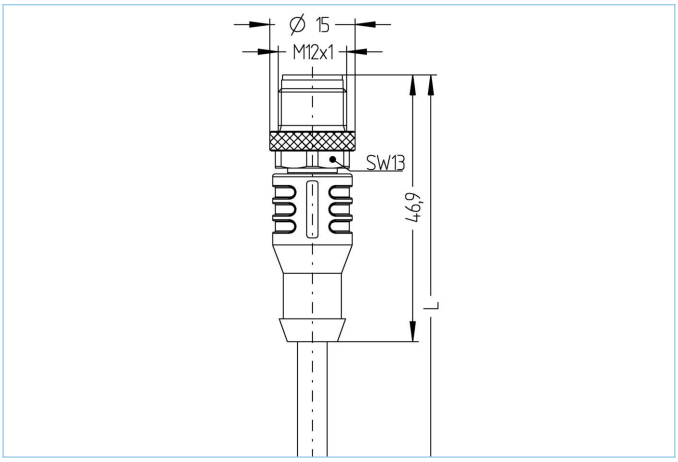



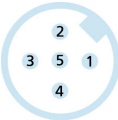

Product data	
Item description	AL-WAS4.5-2/S7400
Item-No.	8084860
Length	2m
Customs tariff-No.	85444290
Step-File	AL-WAS4_5.stp
EAN	4047106249304

Technical data	
Connector	male, straight, M12
Number of pins	5
Pin assignment	1 BN, 2 WH, 3 BU, 4 BK, 5 GY
Coding	A
Rated voltage	60V
Current load per pin (at 40°C)	4A
Insulation resistance	>=10^8Ω
Resistance	≤ 5mΩ
Ambient temperature product	-30°C...+90°C
Contact material	Metal, CuSn, gold-plated
Contact-carrier material	Plastic, TPU, BK
Grip body material	Plastic, TPU, BK
Coupling nut material	Metal, CuZn, nickel-plated
Standards	IEC 61076-2-101
Degree of protection (mounted)	IP65, IP67, IP68
Mechanical life-cycle	>100 mating cycles
Cable end assembly	open cable end
Degree of pollution	3
Style	straight

The information contained in this data sheet was compiled with the utmost care. The liability for the correctness, completeness and timelines is limited to gross negligence.

Cable web	PUR, UL, S7400, robotic

Flexible, silicone- and halogen free control cable with high mechanical strength. Due to its outstanding properties in drag-chain adaption, torsionresistance and weld-field immunity, it is very well suited for the flexible applications in robotics, handling- and assembly technology as well as machine tools. The cable meets the UL and CSA (UL10493/20549; cULus) requirements.

Outer diameter of jacket	5.60 mm
Cable-jacket material	PUR
Jacket color	OG, similar RAL2003
Wire cross-section	5 x 0.34 mm²
Wire insulation material	PP
Wire colors	BN, WH, BU, BK, GY
Wire structure	42 x 0.10 mm
Bending radius (fixed)	5 x Ø-cable
Bending radius (repeated)	10 x Ø-cable
Temperature range (repeated)	-30°C...+90°C
Temperature range (fixed)	-40°C...+90°C
Temperature range (drag chain)	-25°C…+60°C
Drag chain-application	≥ 10 Mio. cycles
Halogen-free	Yes
Torsion	+/-360°/m, ≥ 10 Mio. cycles
Rated voltage cable	≤300 V
Special features	flame retardant, halogen free, hydrolysis proof, LABS free, oil resistant, ozone resistant, recyclable, RoHs compliant, acid- and alkali resistant, drag chain-adapted, welding sparks resistant, seawater resistant, silicone free, torsion resistant, UV resistant

Classification

eCl@ss 6.0	27279218
eCl@ss 7.0	27279218
eCl@ss 8.0	27279218
eCl@ss 9.0	27060311
ETIM 5.0	EC001855
ETIM 6.0	EC001855

Accessories

Mounting-clip, M12
https://www.escha.net/en/products/standard/accessories-for-connectivity/8047660

Torque-wrench set
https://www.escha.net/en/products/standard/accessories-for-connectivity/8055431

Marking rings Ø 9mm
https://www.escha.net/en/products/standard/accessories-for-connectivity?p=1&o=3&n=15&f=809

Screw cap, M12
https://www.escha.net/en/products/standard/accessories-for-connectivity?p=1&o=3&n=15&f=811

Cable Stripping Tool
https://www.escha.net/en/products/standard/accessories-for-connectivity/8066215

Cable Stripping Tool
https://www.escha.net/en/products/standard/accessories-for-connectivity/8066216

Mounting-set, M12
https://www.escha.net/en/products/standard/accessories-for-connectivity/8047664

Link to product

https://www.escha.net/en/products/standard/sensoractuator-connectors/8084860