Receptacle, M12, male, straight, 4 poles, front wall-mounting, wire contact, stainless steel

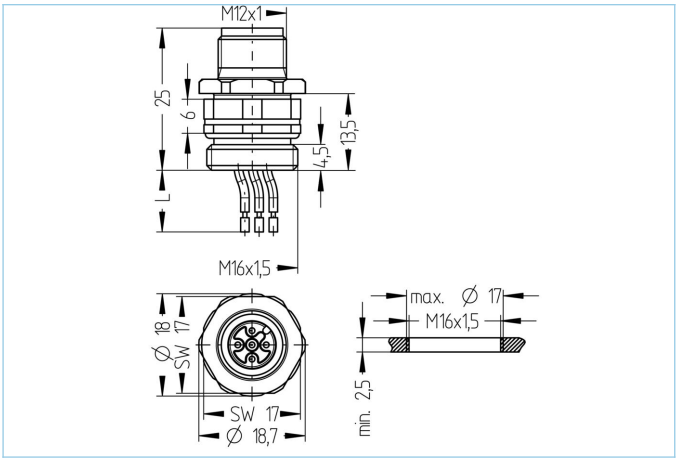

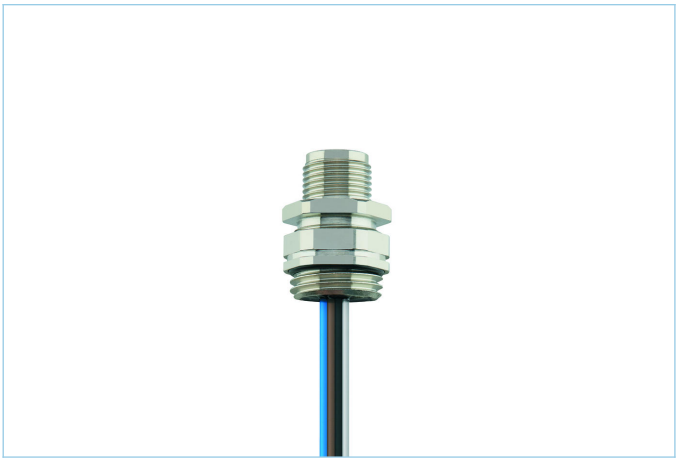

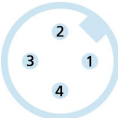

Product data	
Item description	AL-FVM12ESUA4-0,5/M16/S520
Item-No.	8083031
Customs tariff-No.	85444290
Packaging unit	5
Step-File	AL-FVM12SUA4-m-M16_S520.stp
EAN	4047106240684

Technical data	
Connector	male, straight, M12
Number of pins	4
Pin assignment	1 BN, 2 WH, 3 BU, 4 BK
Coding	A
Rated voltage	250V
Current load per pin (at 40°C)	4A
Insulation resistance	≥10⁸Ω
Ambient temperature product	-30°C...+90°C
Contact material	Metal, CuSn, gold-plated
Contact-carrier material	Plastic, PA GF, BK
Receptacle housing material	Stainless steel 1.4404
Material of external sealing	NBR
Mounting direction	Front wall-mounting, positionable
Wrench size of fastening nut	A/F19
Wire length	0.50m
Wire colors	BN, WH, BU, BK
Wire cross-section	4 x 0.34 mm²
Wire insulation material	PVC
Fastening thread	M16x1.5

The information contained in this data sheet was compiled with the utmost care. The liability for the correctness, completeness and timelines is limited to gross negligence.

Connecting type	Wire contact
Standards	IEC 61076-2-101
Degree of protection (mounted)	IP65, IP67, IP68
Mechanical life-cycle	>100 mating cycles
Degree of pollution	3
Style	straight

Classification

eCl@ss 6.0	27279220
eCl@ss 7.0	27440103
eCl@ss 8.0	27440103
eCl@ss 9.0	27440103
ETIM 5.0	EC002061
ETIM 6.0	EC002061

Link to product

https://www.escha.net/en/products/standard/receptacles/8083031