Receptacle, M12, female, straight, 12 poles, front wall-mounting, wire contact, stainless steel

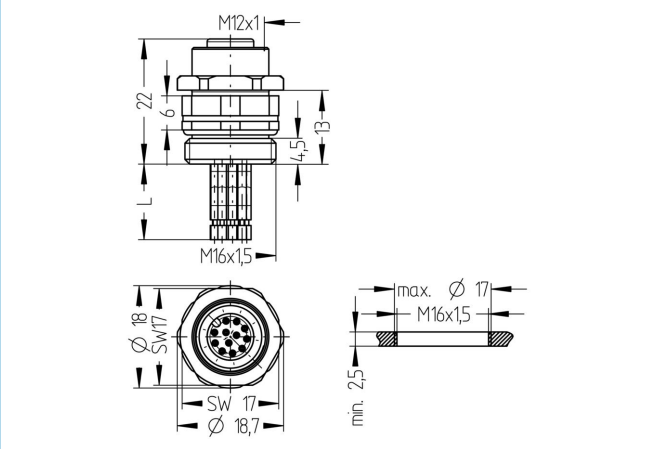

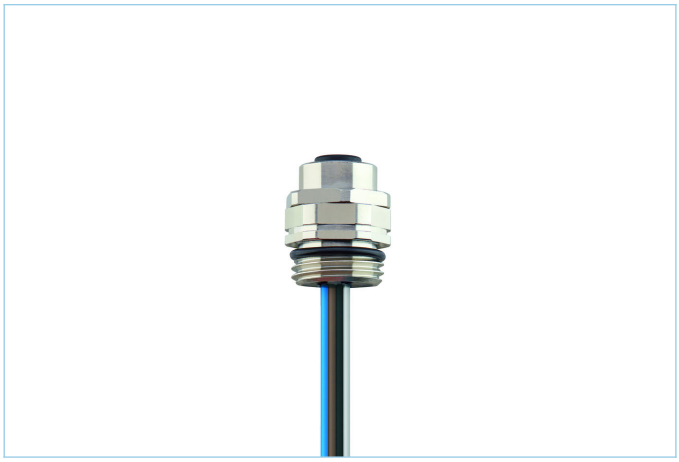

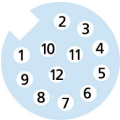

Product data	
Item description	AL-FVM12EKUA12-0,5/M16/S520
Item-No.	8082919
Customs tariff-No.	85444290
Packaging unit	5
Step-File	AL-FVM12KUA12-m_M16_S520.stp
EAN	4047106240653

Technical data	
Connector	female, straight, M12
Number of pins	12
Pin assignment	1 BN, 2 BU, 3 WH, 4 GN, 5 PK, 6 YE, 7 BK, 8 GY, 9 RD, 10 VT, 11 GYPK, 12 RDBU
Coding	A
Rated voltage	30V
Current load per pin (at 40°C)	1.5A
Insulation resistance	≥10^8Ω
Ambient temperature product	-30°C...+90°C
Contact material	Metal, CuZn, gold-plated
Contact-carrier material	Plastic, PA GF, BK
Receptacle housing material	Stainless steel 1.4404
Sealing (female) material	FPM/FKM
Material of external sealing	NBR
Mounting direction	Front wall-mounting, positionable
Wrench size of fastening nut	A/F17
Wire length	0.50m
Wire colors	BN, BU, WH, GN, PK, YE, BK, GY, RD, VT, GYPK, RDBU
Wire cross-section	12 x 0.14 mm²
Wire insulation material	PVC
Fastening thread	M16x1.5

The information contained in this data sheet was compiled with the utmost care. The liability for the correctness, completeness and timelines is limited to gross negligence.

Connecting type	Wire contact
Standards	IEC 61076-2-101
Degree of protection (mounted)	IP65, IP67, IP68
Mechanical life-cycle	>100 mating cycles
Degree of pollution	3
Style	straight

Classification

eCl@ss 6.0	27279220
eCl@ss 7.0	27440103
eCl@ss 8.0	27440103
eCl@ss 9.0	27440103
ETIM 5.0	EC002061
ETIM 6.0	EC002061

Link to product

https://www.escha.net/en/products/standard/receptacles/8082919

The information contained in this data sheet was compiled with the utmost care. The liability for the correctness, completeness and timelines is limited to gross negligence.