RJ45, male, straight, 8 poles, RJ45, male, straight, 8 poles, red, shielded, Industrial Ethernet 10 GBit/s

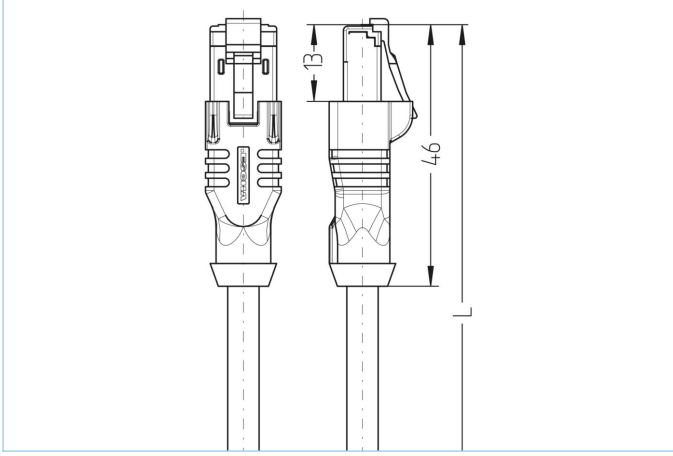

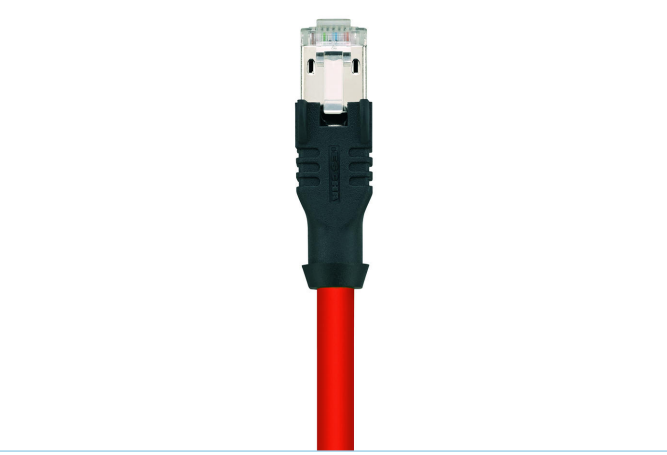

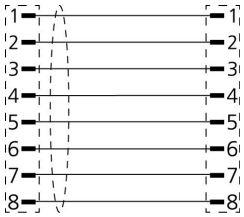

Product data	
Item description	IE-RJ45SS8.002-10-IE-RJ45SS8.002/S620RD
Item-No.	8077294
Length	10m
Customs tariff-No.	85444290
Step-File	IE-RJ45SS8-m-IE-RJ45SS8_S620.stp
EAN	4047106177911
Label-carrier	2 pieces

Technical data	A-side	B-side
Connector	male, straight, RJ45	male, straight, RJ45
Number of pins	8	8
Pin assignment	1 WH/OG, 2 OG; 3 WH/GN, 4 BU; 5 WH/BU, 6 GN; 7 WH/BN, 8 BN	1 WH/OG, 2 OG; 3 WH/GN, 4 BU; 5 WH/BU, 6 GN; 7 WH/BN, 8 BN
Allocation	T568B	T568B
Rated voltage	60V	60V
Current load (at 40°C)	1A	1A
Insulation resistance	$\geq 10^8 \Omega$	$\geq 10^8 \Omega$
Transmission features	Cat6A	Cat6A
Ambient temperature product	-40°C...+70°C	-40°C...+70°C
Contact material	Metal, CuZn, gold-plated	Metal, CuZn, gold-plated
Contact-carrier material	Plastic	Plastic
Grip body material	Plastic, TPE, BK	Plastic, TPE, BK
Shielding	with shielding	with shielding
Material of shielding housing	Metal, CuZn, nickel-plated	Metal, CuZn, nickel-plated
Standards	IEC 60603-7-51	IEC 60603-7-51
Degree of protection (mounted)	IP20	IP20
Mechanical life-cycle	>1000 mating cycles	>1000 mating cycles
Degree of pollution	1	1

Cable web	Cat7, FRNC, UL, S620

High-grade, shielded S/FTP PiMF-data cable, specified up to 600 MHz, with halogen-free outer jacket. The cable complies with the transmission requirements of category 7 according to EN 50288-4-2 and IEC 61156-5. Due to the lean structure and the possible bending radiuses, the flexible AWG27/7-cabele is best adapted for applications in structured wiring according to ISO/IEC 11801 and EN 50173 in buildings, and server cabinets. Ideal solutions for all applications of class EA according to IEEE802.3an, VoIP, and PoE. The cable outperforms the preconditions for the compliance with electromagnetic interference class B according to EN 55022 as well as electromagnetic immunity according to EN 55024.The cable is available in grey, yellow, blue, red, green, and black. The cables meet the UL 444 Communication Cable CMG requirements.

Outer diameter of jacket	6.00 mm
Cable-jacket material	flame retardant, halogen free compound (HFC)
Jacket color	RD, similar RAL3000
Wire cross-section	4 x 2 x AWG27
Wire insulation material	PE
Wire colors	WHOG/OG ; WHGN/GN ; WHBN/BN ; WHBU/BU
Wire structure	7 x 0,14 mm
Bending radius (fixed)	5 x Ø-cable
Temperature range (fixed)	-20°C...+60°C
Shielding	Yes
Halogen-free	Yes
Transmission features	Cat7
Cable test voltage	1kV
Rated voltage cable	125 V
Special features	flame retardant, low emission of smoke, halogen free, high flexibility, no corrosive gases, RoHs compliant

Classification

eCl@ss 7.0	27060308
eCl@ss 8.0	27060308
eCl@ss 9.0	27060308
ETIM 5.0	EC002599
ETIM 6.0	EC002599

Accessories

Unlocking clip for RJ45
https://www.escha.net/en/products/standard/accessories-for-connectivity?p=1&o=3&n=15&f=807

Link to product

https://www.escha.net/en/products/standard/data-connectors/8077294