Y-splitter, M12, male, straight, 4 poles, with cable outlet, M8, female, angled, 4 poles, M8, female, angled, 4 poles

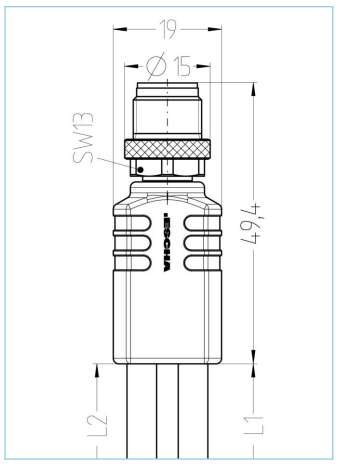

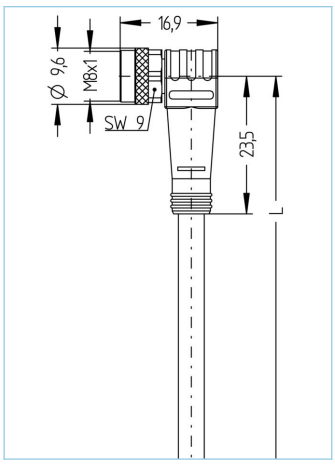

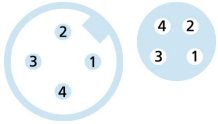

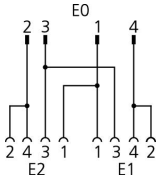

Product data	
Item description	YK-FS4M12-2AL-SWKP4-2/2/S7400
Item-No.	8076029
Length	2m
Customs tariff-No.	85444290
Step-File	YK-FS4M12-2AL-SWKP4-L_L.stp
EAN	4047106173982

Technical data	Exit 0	Exit 1	Exit 2
Connector	male, M12, straight	female, M8, angled	female, M8, female
Contact material	Metal, CuZn, gold-plated	Metal, CuSn, gold-plated	Metal, CuSn, gold-plated
Contact-carrier material	Plastic, TPU, BK	Plastic, TPU, BK	Plastic, TPU, BK
Coupling nut material	Metal, CuZn, nickel-plated	Metal, CuZn, nickel-plated	Metal, CuZn, nickel-plated
Rated voltage	60V	60V	60V
Coding of	A	A	A
Number of pins	4	4	4
Current load (at 40°C)	4A	4A	4A

Insulation resistance	≥10^8Ω
Ambient temperature product	-30°C...+90°C
Grip body material	Plastic, TPU, BK
Sealing (female) material	FPM/FKM
Mechanical life-cycle	>100 mating cycles
Standards	IEC 61076-2-101/-104
Degree of protection (mounted)	IP65, IP67, IP68
Degree of pollution	3

Cable web	PUR, UL, S7400, robotic

Flexible, silicone- and halogen free control cable with high mechanical strength. Due to its outstanding properties in drag-chain adaption, torsionresistance and weld-field immunity, it is very well suited for the flexible applications in robotics, handling- and assembly technology as well as machine tools. The cable meets the UL and CSA (UL10493/20549; cULus) requirements.

Outer diameter of jacket	4.80 mm
Cable-jacket material	PUR
Jacket color	OG, similar RAL2003
Wire cross-section	4 x 0.25 mm²
Wire insulation material	PP
Wire colors	BN, WH, BU, BK
Wire structure	32 x 0.10 mm
Bending radius (fixed)	5 x Ø-cable
Bending radius (repeated)	10 x Ø-cable
Temperature range (repeated)	-30°C...+90°C
Temperature range (fixed)	-40°C...+90°C
Temperature range (drag chain)	-25°C…+60°C
Drag chain-application	5 Mio. cycles
Halogen-free	Yes
Torsion	+/-360°/m, ≥ 2 Mio. cycles
Rated voltage cable	≤300 V
Special features	flame retardant, halogen free, hydrolysis proof, LABS free, oil resistant, ozone resistant, recyclable, RoHs compliant, acid- and alkali resistant, drag chain-adapted, welding sparks resistant, seawater resistant, silicone free, torsion resistant, UV resistant

Classification	
eCl@ss 6.0	27279218
eCl@ss 7.0	27279218
eCl@ss 8.0	27279218
eCl@ss 9.0	27060313
ETIM 5.0	EC001855
ETIM 6.0	EC001855

Link to product

https://www.escha.net/en/products/standard/t-splitters-y-splitters/8076029

The information contained in this data sheet was compiled with the utmost care. The liability for the correctness, completeness and timelines is limited to gross negligence.