RJ45 light, male, straight, 8 poles, RJ45 light, male, straight, 8 poles, shielded, Industrial Ethernet 100 MBit/s

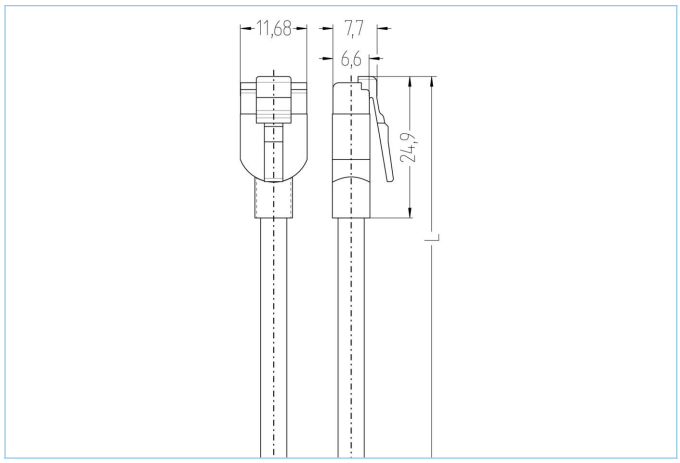

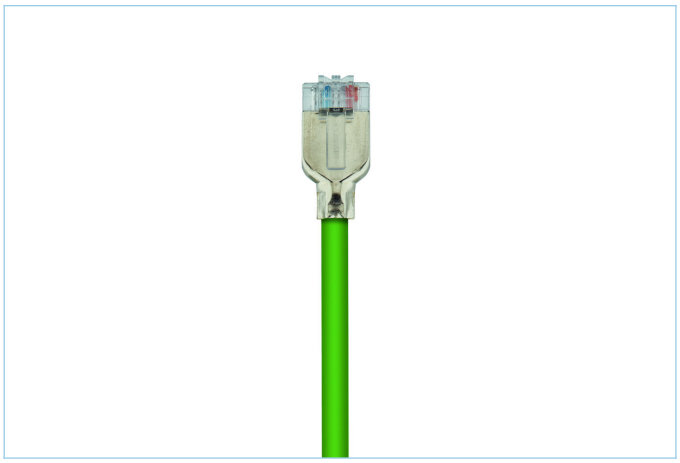

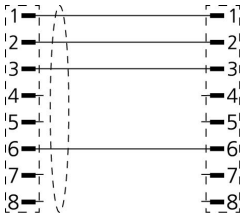

Product data	
Item description	IE-RJ45SLS8.005-2-IE-RJ45SLS8.005/S3400
Item-No.	8071964
Length	2m
Customs tariff-No.	85444290
Step-File	IE-RJ45SLS8-m-IE-RJ45SLS8.stp
EAN	4047106167028
Label-carrier	2 pieces

Technical data	A-side	B-side
Connector	male, straight, RJ45 light	male, straight, RJ45 light
Number of pins	4	4
Pin assignment	1 WHOG, 2 OG, 3 WHBU, 6 BU	1 WHOG, 2 OG, 3 WHBU, 6 BU
Allocation	Industrial	Industrial
Rated voltage	60V	60V
Current load (at 40°C)	1A	1A
Insulation resistance	≥10⁸Ω	≥10⁸Ω
Transmission features	Cat5e	Cat5e
Ambient temperature product	-40°C...+80°C	-40°C...+80°C
Contact material	Metal, CuSn, gold-plated	Metal, CuSn, gold-plated
Contact-carrier material	Plastic	Plastic
Shielding	with shielding	with shielding
Material of shielding housing	Metal, CuZn, nickel-plated	Metal, CuZn, nickel-plated
Standards	IEC 60603-7-5	IEC 60603-7-5
Degree of protection (mounted)	IP20	IP20
Mechanical life-cycle	>750 mating cycles	>750 mating cycles
Degree of pollution	1	1

The information contained in this data sheet was compiled with the utmost care. The liability for the correctness, completeness and timelines is limited to gross negligence.

Cable web	Cat5e, PUR, UL, S3400

Shielded PUR Ethernet-cable for industrial applications. Fits to real-time requirements according to IEC61158. The cable meets the UL-Style 21815 (80°/300V)- and the Cat5 (electrical properties according to EN50288-2-2) requirements. Materials and a constructive setup for increased mechanical stresses (abrasion, bending, vibrations etc.) of the cable. Drag-chain/torsion operations are possible. High tensile strength through incorporated Kevlar-strands.

Outer diameter of jacket	4.80 mm
Cable-jacket material	PUR
Jacket color	GN, similar RAL6018
Wire cross-section	1 x 4 x AWG26, star quad
Wire insulation material	PP
Wire colors	WHBU/BU, WHOG/OG
Wire structure	19 x 0.10 mm
Bending radius (fixed)	4 x Ø-cable
Bending radius (repeated)	7,5 x Ø-cable
Temperature range (repeated)	-30°C...+70°C
Temperature range (fixed)	-40°C...+80°C
Transmission features	Cat5
Rated voltage cable	300 V UL rating
Special features	halogen free, high flexibility, hydrolysis proof, LABS free, microbes resistant, oil resistant, ozone resistant, recyclable, RoHs compliant, acid- and alkali resistant, drag chain-adapted, seawater resistant, UV resistant

Classification	
eCl@ss 6.0	27061801
eCl@ss 7.0	27060308
eCl@ss 8.0	27060308
eCl@ss 9.0	27060308
ETIM 5.0	EC002599
ETIM 6.0	EC002599

Link to product

https://www.escha.net/en/products/standard/data-connectors/8071964