RJ45, male, straight, 8 poles, RJ45, male, straight, 8 poles, yellow, shielded, Industrial Ethernet 100 MBit/s

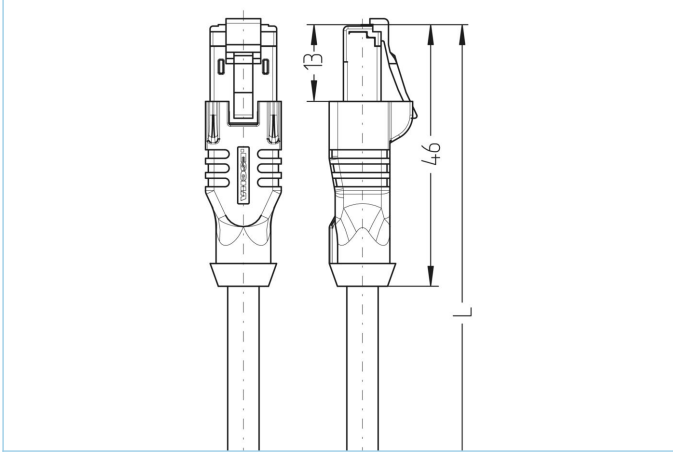

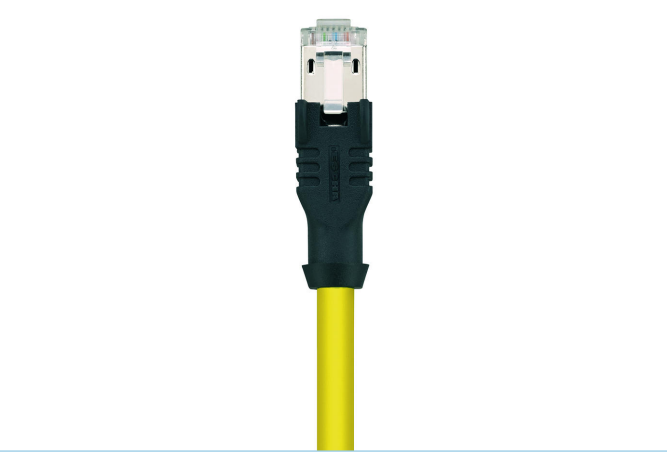

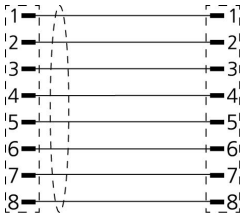

Product data	
Item description	IE-RJ45SS8.002-0,5-IE-RJ45SS8.002/S510YE
Item-No.	8068525
Length	0.5m
Customs tariff-No.	85444290
Step-File	IE-RJ45SS8-m-IE-RJ45SS8_S510.stp
EAN	4047106154714
Label-carrier	2 pieces

Technical data	A-side	B-side
Connector	male, straight, RJ45	male, straight, RJ45
Number of pins	8	8
Pin assignment	1 WH/OG, 2 OG; 3 WH/GN, 4 BU; 5 WH/BU, 6 GN; 7 WH/BN, 8 BN	1 WH/OG, 2 OG; 3 WH/GN, 4 BU; 5 WH/BU, 6 GN; 7 WH/BN, 8 BN
Allocation	T568B	T568B
Rated voltage	60V	60V
Current load (at 40°C)	1A	1A
Insulation resistance	$\geq 10^8 \Omega$	$\geq 10^8 \Omega$
Transmission features	Cat5e	Cat5e
Ambient temperature product	-40°C...+70°C	-40°C...+70°C
Contact material	Metal, CuZn, gold-plated	Metal, CuZn, gold-plated
Contact-carrier material	Plastic	Plastic
Grip body material	Plastic, TPE, BK	Plastic, TPE, BK
Shielding	with shielding	with shielding
Material of shielding housing	Metal, CuZn, nickel-plated	Metal, CuZn, nickel-plated
Standards	IEC 60603-7-5	IEC 60603-7-5
Degree of protection (mounted)	IP20	IP20
Mechanical life-cycle	>1000 mating cycles	>1000 mating cycles
Degree of pollution	1	1

The information contained in this data sheet was compiled with the utmost care. The liability for the correctness, completeness and timelines is limited to gross negligence.

Cable web	Cat5e, PVC, S510

High-grade, shielded SF/UTP-cable, specified up to 200MHz, with PVC-outer jacket for safe data transmission in the data infrastructure and at office level. The VDE-tested Cat5e cable (according to EN50288 and IEC 61156) meets highest demands on economic efficiency, universality, and performance. Due to the possible bending radiuses, the flexible AWG26/7-cable is best adapted for applications in structured wiring according to ISO/

IEC 11801 as well as EN 50173 in buildings, server- and switch cabinets. Ideal solutions for all applications of class D, according to IEEE802.3ab, VoIP and PoE. The cable is available in grey, yellow, blue, red, and green. Black on request.

Outer diameter of jacket	5.50 mm
Cable-jacket material	PVC
Jacket color	YE, similar RAL 1021
Wire cross-section	4 x 2 x AWG26
Wire insulation material	PE
Wire colors	WHOG/OG ; WHGN/GN ; WHBN/BN ; WHBU/BU
Wire structure	7 x 0.16 mm
Bending radius (fixed)	5 x Ø-cable
Temperature range (fixed)	-20°C...+60°C
Shielding	Yes
Transmission features	Cat5e
Special features	high flexibility, RoHs compliant, VDE-proved

Classification	
eCl@ss 7.0	27060308
eCl@ss 8.0	27060308
eCl@ss 9.0	27060308
ETIM 5.0	EC002599
ETIM 6.0	EC002599

Accessories

Unlocking clip for RJ45
https://www.escha.net/en/products/standard/accessories-for-connectivity?p=1&o=3&n=15&f=807

Link to product

https://www.escha.net/en/products/standard/data-connectors/8068525