M12, female, angled, 5 poles, with LED, Food & Beverage

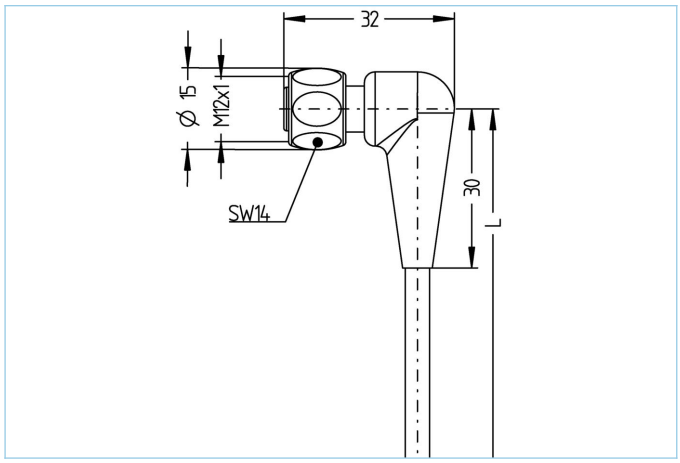

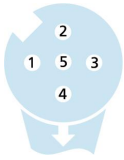

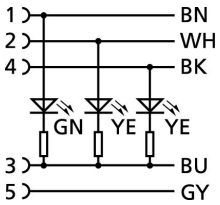

Product data	
Item description	FB-WWAKH4.5P3-5/P00
Item-No.	8063809
Length	5m
Customs tariff-No.	85444290
Step-File	FB-WWAKH4.5P3 .stp
EAN	4047106151201

Technical data	
Connector	female, angled, M12, with LED
Number of pins	5
Pin assignment	1 BN, 2 WH, 3 BU, 4 BK, 5 GY
Coding	A
Rated voltage	30V
Current load per pin (at 40°C)	4A
Insulation resistance	≥10^8Ω
Resistance	≤ 5mΩ
Ambient temperature product	-40°C...+105°C
Circuit logic	pnp
Signal status-indicator	LED YE/YE
Operating voltage-indicator	LED GN
Contact material	Metal, CuZn, gold-plated
Contact-carrier material	Plastic, PP, GY
Grip body material	Plastic, PP, transparent
Coupling nut material	Stainless steel, V4A
Sealing (female) material	EPDM

The information contained in this data sheet was compiled with the utmost care. The liability for the correctness, completeness and timelines is limited to gross negligence.

Standards	IEC 61076-2-101
Degree of protection (mounted)	IP65, IP67, IP68, IP69
Mechanical life-cycle	>100 mating cycles
Cable end assembly	open cable end
Degree of pollution	3
Style	angled

Cable web — PVC, P00, GY

PVC-cable for measurement and control-, and sensor technology. Suitable for applications in dry areas on packaging machines, assembly- and conveyor technology. High flexibility with unstressed movement (conditional drag-chain application possible). Predestined for applications in food- and beverage industry.

Outer diameter of jacket	4.90 mm
Cable-jacket material	PVC
Jacket color	GY, similar RAL7040
Wire cross-section	5 x 0.34 mm²
Wire insulation material	PVC
Wire colors	BN, WH, BU, BK, GY
Wire structure	19 x 0.15 mm
Bending radius (fixed)	5 x Ø-cable
Bending radius (repeated)	10 x Ø-cable
Temperature range (repeated)	0°C...+80°C
Temperature range (fixed)	-25°C...+80°C
Rated voltage cable	≤300 V
Special features	good resistance against oils and chemicals, LABS free, ozone resistant, recyclable, RoHs compliant, acid- and alkali resistant, seawater resistant, UV resistant

Classification

eCl@ss 6.0	27279218
eCl@ss 7.0	27279218
eCl@ss 8.0	27279218
eCl@ss 9.0	27060311
ETIM 5.0	EC001855
ETIM 6.0	EC001855

Accessories

Mounting-set, M12
https://www.escha.net/en/products/standard/accessories-for-connectivity/8047664

Torque-wrench set
https://www.escha.net/en/products/standard/accessories-for-connectivity/8055431

Marking rings Ø 9mm
https://www.escha.net/en/products/standard/accessories-for-connectivity?p=1&o=3&n=15&f=809

Cable Stripping Tool
https://www.escha.net/en/products/standard/accessories-for-connectivity/8066215

Cable Stripping Tool
https://www.escha.net/en/products/standard/accessories-for-connectivity/8066216

Food & Beverage, Adapter
https://www.escha.net/en/products/standard/accessories-for-connectivity/8063392

Link to product

https://www.escha.net/en/products/standard/connectors-for-the-food-industry/8063809