M12, female, straight, 5 poles, M12, male, straight, 5 poles, Food & Beverage

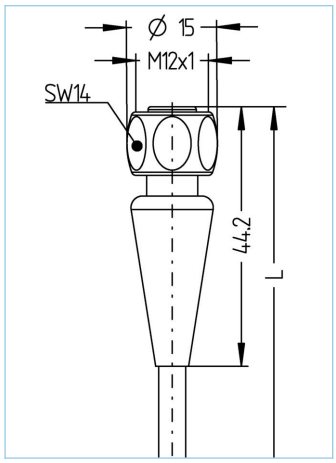

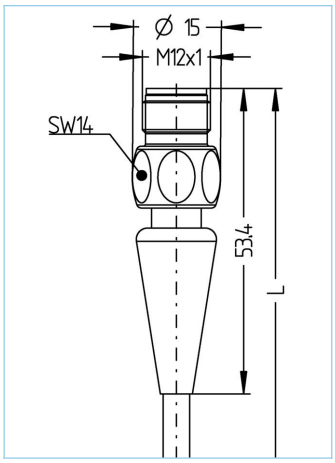

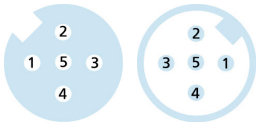

Product data	
Item description	FB-WAKH4.5-2-FB-WASH4.5/S3930
Item-No.	8063682
Length	2m
Customs tariff-No.	85444290
Step-File	FB-WAKH4.5-L-FB-WASH4.5.stp
EAN	4047106149932

Technical data	A-side	B-side
Connector	female, straight, M12	male, straight, M12
Number of pins	5	5
Pin assignment	1 BN, 2 WH, 3 BU, 4 BK, 5 GY	1 BN, 2 WH, 3 BU, 4 BK, 5 GY
Coding of	A	A
Rated voltage	60V	60V
Current load (at 40°C)	4A	4A
Insulation resistance	≥10^8Ω	≥10^8Ω
Resistance	≤ 5mΩ	≤ 5mΩ
Ambient temperature product	-40°C...+105°C	-40°C...+105°C
Contact material	Metal, CuZn, gold-plated	Metal, CuZn, gold-plated
Contact-carrier material	Plastic, PP, GY	Plastic, PP, GY
Grip body material	Plastic, PP, GY	Plastic, PP, GY
Coupling nut material	Stainless steel, V4A	Stainless steel, V4A
Sealing (female) material	EPDM	
Standards	IEC 61076-2-101	IEC 61076-2-101
Degree of protection (mounted)	IP65, IP67, IP68, IP69	IP65, IP67, IP68, IP69
Mechanical life-cycle	>100 mating cycles	>100 mating cycles
Degree of pollution	3	3

The information contained in this data sheet was compiled with the utmost care. The liability for the correctness, completeness and timelines is limited to gross negligence.

Cable web	TPE, S3930, GY

TPE jacketed cable with elevated position-proof wires with an insulation of special polyester. Resistant to all common acidic- and alkaline cleaning- and disinfection agents. PVC-free plastics prevent discoloration and hardening by detergents. Predestined for applications in the food- and beverage industry. Due to the materials used, it is also suitable for applications in machine- and plant construction. High stability, good drag-chain- and torsion capability.

Outer diameter of jacket	5.0 +/- 0.15 mm
Cable-jacket material	TPE
Jacket color	GY, similar RAL7035
Wire cross-section	5 x 0.34 mm²
Wire insulation material	TPE
Wire colors	BN, WH, BU, BK, GY
Wire structure	42 x 0.10 mm
Bending radius (fixed)	5 x Ø-cable
Bending radius (repeated)	10 x Ø-cable
Temperature range (repeated)	-25°C...+105°C
Temperature range (fixed)	-40°C...+105°C
Temperature range (drag chain)	-25°C…+60°C
Halogen-free	Yes
Rated voltage cable	≤240 VAC
Special features	increased thermal load, halogen free, excellent acid- and alkali resistant, hydrolysis proof, LABS free, ozone resistant, recyclable, RoHs compliant, drag chain-adapted, seawater resistant, torsion resistant, verified resistance against P3-topactive, flexibility at low temperature

Classification

eCl@ss 6.0	27279218
eCl@ss 7.0	27279218
eCl@ss 8.0	27279218
eCl@ss 9.0	27060311
ETIM 5.0	EC001855
ETIM 6.0	EC001855

Accessories

Mounting-set, M12
https://www.escha.net/en/products/standard/accessories-for-connectivity/8047664

Torque-wrench set
https://www.escha.net/en/products/standard/accessories-for-connectivity/8055431

Marking rings Ø 9mm
https://www.escha.net/en/products/standard/accessories-for-connectivity?p=1&o=3&n=15&f=809

Food & Beverage, Adapter
https://www.escha.net/en/products/standard/accessories-for-connectivity/8063392

Link to product

https://www.escha.net/en/products/standard/connectors-for-the-food-industry/8063682