# M12, female, angled, 4 poles, grip body with thread, sensor-/actuator cable

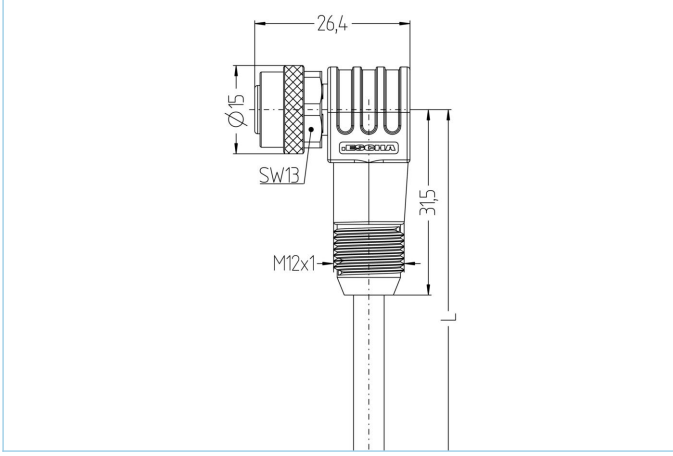

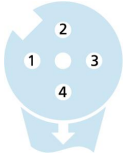


| Product data | |
|---|---|
| Item description | AL-WWAKG4-5/P00 |
| Item-No. | 8052833 |
| Length | 5m |
| Customs tariff-No. | 85444290 |
| Step-File | AL-WWAKG4.stp |
| EAN | 4047106138851 |

| Technical data | |
|---|---|
| Connector | female, angled, M12, grip body with thread |
| Number of pins | 4 |
| Pin assignment | 1 BN, 2 WH, 3 BU, 4 BK |
| Coding | A |
| Rated voltage | 250V |
| Current load per pin (at 40°C) | 4A |
| Insulation resistance | >=$10^8$Ω |
| Resistance | ≤ 5mΩ |
| Ambient temperature product | -30°C...+90°C |
| Contact material | Metal, CuSn, gold-plated |
| Contact-carrier material | Plastic, TPU, BK |
| Grip body material | Plastic, TPU, BK |
| Coupling nut material | Metal, CuZn, nickel-plated |
| Sealing (female) material | FPM/FKM |
| Standards | IEC 61076-2-101 |
| Degree of protection (mounted) | IP65, IP67, IP68 |
| Mechanical life-cycle | >100 mating cycles |
| Cable end assembly | open cable end |
| Degree of pollution | 3 |
| Style | angled |

The information contained in this data sheet was compiled with the utmost care. The liability for the correctness, completeness and timelines is limited to gross negligence.

| Cable web | PVC, P00, GY |
|---|---|

PVC-cable for measurement and control-, and sensor technology. Suitable for applications in dry areas on packaging machines, assembly- and conveyor technology. High flexibility with unstressed movement (conditional drag-chain application possible). Predestined for applications in food- and beverage industry.

| | |
|---|---|
| Outer diameter of jacket | 4.50 mm |
| Cable-jacket material | PVC |
| Jacket color | GY, similar RAL7040 |
| Wire cross-section | 4 x 0.34 mm² |
| Wire insulation material | PVC |
| Wire colors | BN, WH, BU, BK |
| Wire structure | 19 x 0.15 mm |
| Bending radius (fixed) | 5 x Ø-cable |
| Bending radius (repeated) | 10 x Ø-cable |
| Temperature range (repeated) | 0°C...+80°C |
| Temperature range (fixed) | -25°C...+80°C |
| Rated voltage cable | ≤300 V |
| Special features | good resistance against oils and chemicals, LABS free, ozone resistant, recyclable, RoHs compliant, acid- and alkali resistant, seawater resistant, UV resistant |

| Classification | |
|---|---|
| eCl@ss 6.0 | 27279218 |
| eCl@ss 7.0 | 27279218 |
| eCl@ss 8.0 | 27279218 |
| eCl@ss 9.0 | 27060311 |
| ETIM 5.0 | EC001855 |
| ETIM 6.0 | EC001855 |

## Accessories

Mounting-set, M12
https://www.escha.net/en/products/standard/accessories-for-connectivity/8047664

Torque-wrench set
https://www.escha.net/en/products/standard/accessories-for-connectivity/8055431

Marking rings Ø 9mm
https://www.escha.net/en/products/standard/accessories-for-connectivity?p=1&o=3&n=15&f=809

Cable Stripping Tool
https://www.escha.net/en/products/standard/accessories-for-connectivity/8066215

Cable Stripping Tool
https://www.escha.net/en/products/standard/accessories-for-connectivity/8066216

Adapter piece, M12, with protective hose

## Link to product

https://www.escha.net/en/products/standard/sensoractuator-connectors/8052833