Valve connector, housing style CI, 2+PE bridged, M12, male, straight, 5 poles, z-diode, sensor-/actuator cable

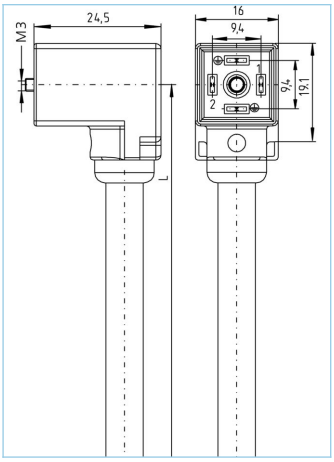

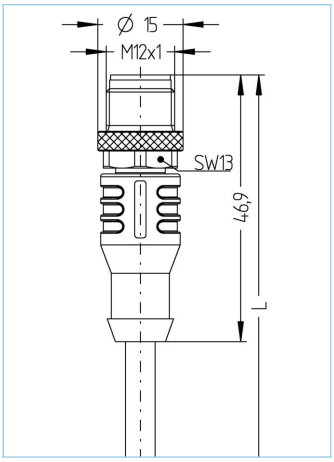

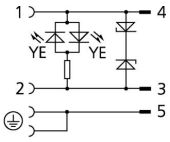

Product data	
Item description	VCI22-24.4-5-AL-WAS5.002/P01
Item-No.	8052292
Length	5m
Customs tariff-No.	85444290
Step-File	VCI22-24.4-L-AL-WAS5.stp
EAN	4047106117870
Label-carrier	2 pieces

Technical data	A-side	B-side
Connector	female, angled, Valve CI	male, straight, M12
Number of pins	2+PE, PE bridged	2+PE
Pin assignment	1 BN, 2 BU, PE: GNYE	3 BU, 4 BN, 5 GNYE
Coding of		A
Rated voltage	30$V_{AC/DC}$	60V
Current load (at 40°C)	4A	4A
Insulation resistance	≥10^8Ω	≥10^8Ω
Ambient temperature product	-30°C...+90°C	-30°C...+90°C
Contact material	Metal, CuZn, silver-plated	Metal, CuZn, gold-plated
Contact-carrier material	Plastic, PA, BK	Plastic, TPU, BK
Grip body material	Plastic, TPU, BK, translucent	Plastic, TPU, BK
Coupling nut material		Metal, CuZn, nickel-plated
Sealing (female) material	Plastic, TPU	
Signal status-indicator	LED YE	
Protection circuit	Z-diode	
Fixing screw	Metal, CuZn, nickel-plated	
Housing style	CI	
Standards	DIN EN 175301-803	IEC 61076-2-101
Degree of protection (mounted)	IP65, IP67, IP68	IP65, IP67, IP68
Mechanical life-cycle	>100 mating cycles	>100 mating cycles
Degree of pollution	3	3

The information contained in this data sheet was compiled with the utmost care. The liability for the correctness, completeness and timelines is limited to gross negligence.

Cable web	PVC, UL, P01, GY

PVC-cable for measurement and control-, and sensor technology. Suitable for applications in dry areas on packaging machines, assembly- and conveyor technology. High flexibility with unstressed movement (conditional drag-chain application possible). Predestined for applications in food- and beverage industry.

Outer diameter of jacket	5.30 mm
Cable-jacket material	PVC
Jacket color	GY, similar RAL7040
Wire cross-section	4+1 x 0.34mm²
Wire insulation material	PVC
Wire colors	BN, WH, BU, BK, GNYE
Wire structure	19 x 0.15 mm
Bending radius (fixed)	5 x Ø-cable
Bending radius (repeated)	10 x Ø-cable
Temperature range (repeated)	0°C...+80°C
Temperature range (fixed)	-25°C...+80°C
Rated voltage cable	≤300 V
Special features	good resistance against oils and chemicals, LABS free, ozone resistant, recyclable, RoHs compliant, acid- and alkali resistant, seawater resistant, UV resistant

Classification	
eCl@ss 6.0	27279218
eCl@ss 7.0	27279218
eCl@ss 8.0	27279218
eCl@ss 9.0	27060312
ETIM 5.0	EC001855
ETIM 6.0	EC001855

Accessories

Labels, Valve connector
https://www.escha.net/en/products/standard/accessories-for-connectivity/8047109

Link to product

https://www.escha.net/en/products/standard/valve-connectors/8052292